Swivel feet, levelling feet

Modular structure of a swivel foot

Application:
Swivel feet are of modular design. The components can be individually combined to match the application. The swivel feet are applicable for use on machines, plants and even office furniture.

Modular design:
Swivel feet consist of two components - a plate and a threaded spindle or ball joint. **Any** plate can be combined with **any** threaded spindle or ball joint (see Fig. 1).

Height of swivel foot:
Swivel feet always have a minimum height of H = 22.5 mm independently of the plate, threaded spindle or ball joint size (see Fig. 2). When assembling with threaded spindle, the height of the complete swivel foot is calculated by adding 22.5 mm to the length of the threaded spindle + the height of the hexagon. (Total height of swivel foot = L + L1 + 22.5 mm).

When assembling with ball joint, the length L is void.

Fig. 1

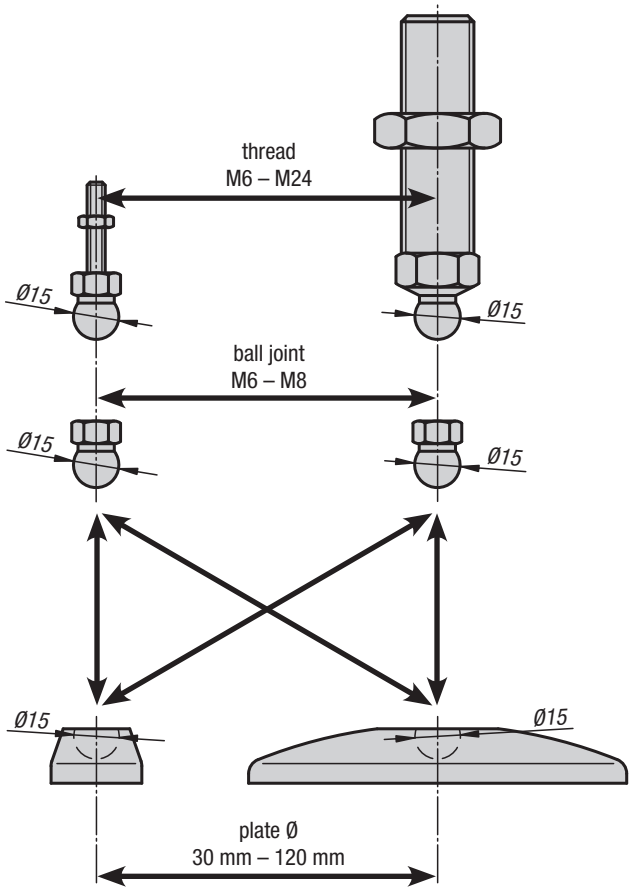

Assembly:
Using a plastic hammer, knock the ball of the threaded spindle or ball joint vertically into the swivel foot plate. If necessary, the two fastening holes (closed) in the swivel foot plate can be opened by simply punching them out to allow the swivel foot to be fastened to a base.

Fig. 2

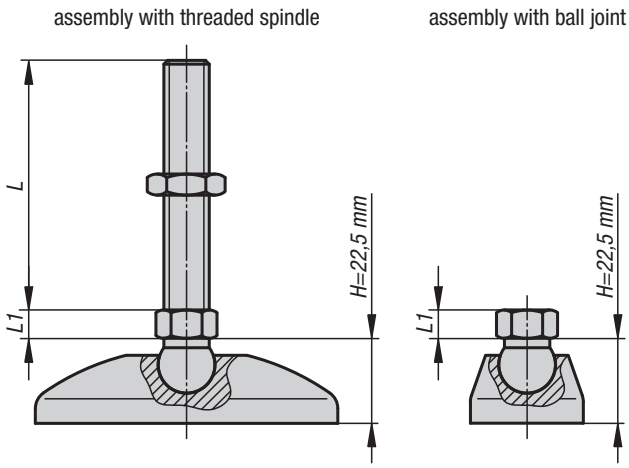

Inclination angle of threaded spindle or ball joint:

Note for ordering:
If the swivel foot plate and the threaded spindle or ball joint are to be supplied assembled, please add the suffix **"assembled"** to the order number for the plate and the spindle or ball joint (see sample order on the relevant product page).

Swivel feet threaded spindles

steel or stainless steel

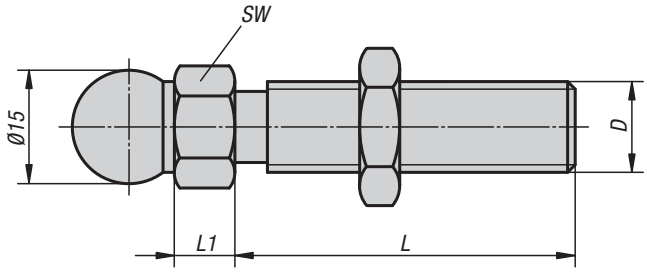

Material:
Steel or stainless steel 1.4301.

Version:
Steel blue passivated.
Stainless steel, bright.

Sample order:
K0421.060151
K0421.060151 and K0415.1030 **assembled**

Note for ordering:
If the threaded spindle and the plate are to be supplied assembled, please add the suffix **"assembled"** to the order number for the spindle and plate.
(e.g. K0421.060151 and K0415.1030 **assembled**.)

Note:
Swivel feet consist of a plate and a threaded spindle. Any plate can be combined with any threaded spindle. The height of the complete swivel foot is calculated by the length of the threaded spindle + height of hexagon + 22.5 mm. (Overall height of swivel foot = L + L1 + 22.5 mm).

KIPP Swivel feet threaded spindles

Order No. Steel	Order No. Stainless steel	D	L	L1	SW	Load rating max. kN
K0421.060151	K0421.060152	M6	15	7,5	14	2
K0421.060301	K0421.060302	M6	30	7,5	14	2
K0421.080401	K0421.080402	M8	40	7,5	14	3,5
K0421.080801	K0421.080802	M8	80	7,5	14	3,5
K0421.100451	K0421.100452	M10	45	7,5	14	4,7
K0421.100701	K0421.100702	M10	70	7,5	14	4,7
K0421.100901	K0421.100902	M10	90	7,5	14	4,7
K0421.101251	K0421.101252	M10	125	7,5	14	4,7
K0421.101501	K0421.101502	M10	150	7,5	14	4,7
K0421.120451	K0421.120452	M12	45	7,5	14	7,7
K0421.120661	K0421.120662	M12	66	7,5	14	7,7
K0421.121001	K0421.121002	M12	100	7,5	14	7,7
K0421.121251	K0421.121252	M12	125	7,5	14	7,7
K0421.121501	K0421.121502	M12	150	7,5	14	7,7
K0421.140661	K0421.140662	M14	66	7,5	14	11,1
K0421.141001	K0421.141002	M14	100	7,5	14	11,1
K0421.141251	K0421.141252	M14	125	7,5	14	11,1
K0421.141501	K0421.141502	M14	150	7,5	14	11,1
K0421.160661	K0421.160662	M16	66	7,5	17	14,5
K0421.161001	K0421.161002	M16	100	7,5	17	14,5
K0421.161251	K0421.161252	M16	125	7,5	17	14,5
K0421.161501	K0421.161502	M16	150	7,5	17	14,5
K0421.162001	K0421.162002	M16	200	7,5	17	14,5
K0421.200851	K0421.200852	M20	85	10,5	22	24,3
K0421.201001	K0421.201002	M20	100	10,5	22	24,3
K0421.201251	K0421.201252	M20	125	10,5	22	24,3
K0421.201501	K0421.201502	M20	150	10,5	22	24,3
K0421.202001	K0421.202002	M20	200	10,5	22	24,3
K0421.240851	K0421.240852	M24	85	10,5	24	36,1
K0421.241001	K0421.241002	M24	100	10,5	24	36,1
K0421.241251	K0421.241252	M24	125	10,5	24	36,1
K0421.241501	K0421.241502	M24	150	10,5	24	36,1
K0421.242001	K0421.242002	M24	200	10,5	24	36,1

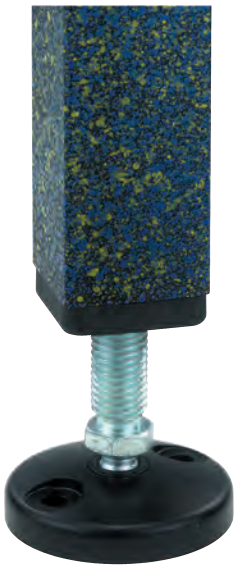

Swivel feet ball joints

with internal thread

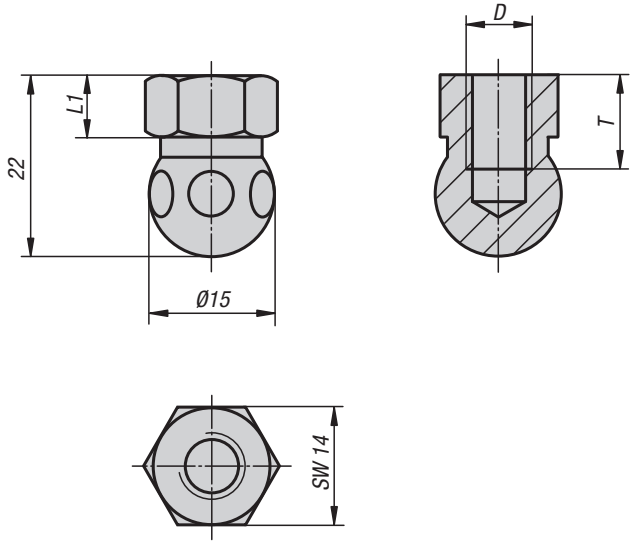

Material:
Steel or stainless steel 1.4301.

Version:
Steel blue passivated.
Stainless steel, bright.

Sample order:
K0422.061
K0422.061 and K0415.1030 **assembled**

Note for ordering:
If the ball joint and plate are to be supplied assembled, please add the suffix **"assembled"** to the order number for the ball joint and plate.
(e.g. K0422.061 and K0415.1030 **assembled**.)

Note:
For fastening swivel feet with standard screws.

Swivel feet consist of a ball joint and a plate. Any ball joint can be combined with any plate.
The height of the complete swivel foot is calculated by the height of the hexagon + 22.5 mm.
(Overall height of swivel foot = L1 + 22.5 mm).

KIPP Swivel feet ball joints with internal thread

Order No. Steel	Order No. Stainless steel	D	L1	T
K0422.061	**K0422.062**	M6	7,5	10
K0422.081	**K0422.082**	M8	7,5	10

Swivel feet plates

plastic

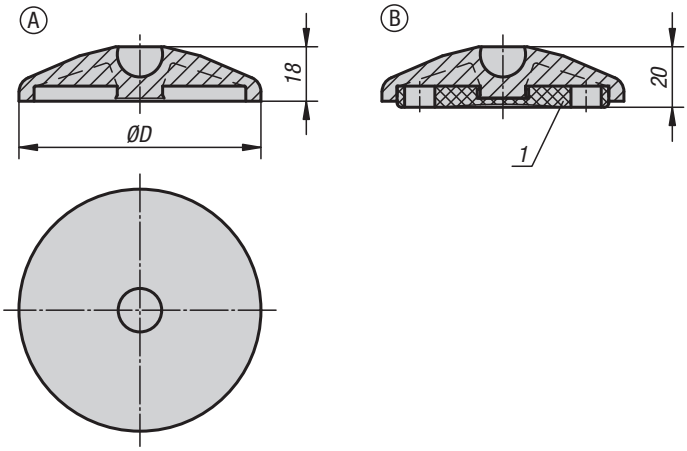

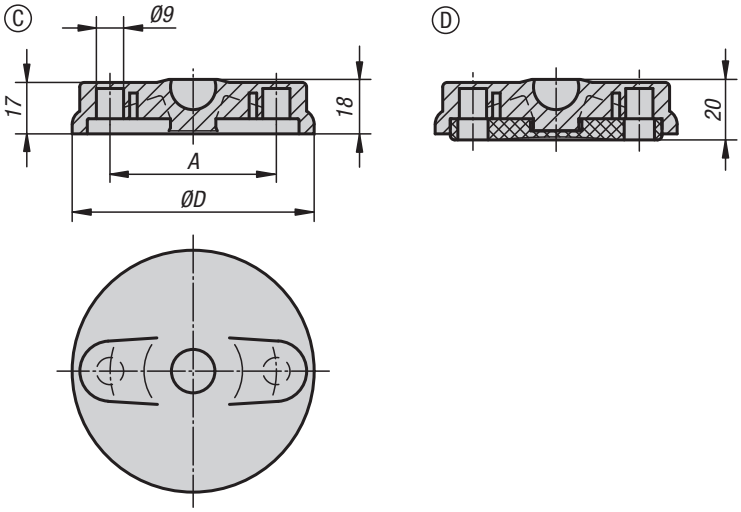

Material:
Plates, thermoplastic, glass bead reinforced.
Anti-slip plate thermoplastic elastomer.

Version:
black.

Sample order:
K0415.1030
K0415.1030 and K0421.060151 **assembled**

Note for ordering:
If the swivel foot plate and the threaded spindle or ball joint are to be supplied assembled, please add the suffix **"assembled"** to the order number for the plate and the spindle or ball joint.
(e.g. K0415.1030 and K0421.060151 **"assembled"**.)

Note:
Swivel feet consist of a plate and a threaded spindle or ball joint. Any plate can be combined with any threaded spindle or ball joint. The anti-slip plate absorbs vibrations and prevents the swivel foot slipping.
For matching threaded spindles see K0421.
For matching ball joints see K0422.

Drawing reference:
1) From plate Ø 80
Form A without screw-on hole, without anti-slip plate
Form B without screw-on hole, with anti-slip plate
Form C with screw-on hole (closed), without anti-slip plate
Form D with screw-on hole (closed), with anti-slip plate

KIPP Swivel feet plates, plastic

Order No. Form A	Order No. Form B	D	Load rating max. kN
K0415.1030	K0415.2030	30	5
K0415.1040	K0415.2040	40	9
K0415.1045	K0415.2045	45	9
K0415.1050	K0415.2050	50	9
K0415.1060	K0415.2060	60	9
K0415.1080	K0415.2080	80	9
K0415.1100	K0415.2100	100	9

Order No. Form C	Order No. Form D	D	A	Load rating max. kN
K0415.3080	K0415.4080	80	55	9
K0415.3100	K0415.4100	100	74	9
K0415.3120	K0415.4120	120	94	9

Antistatic plate for swivel feet

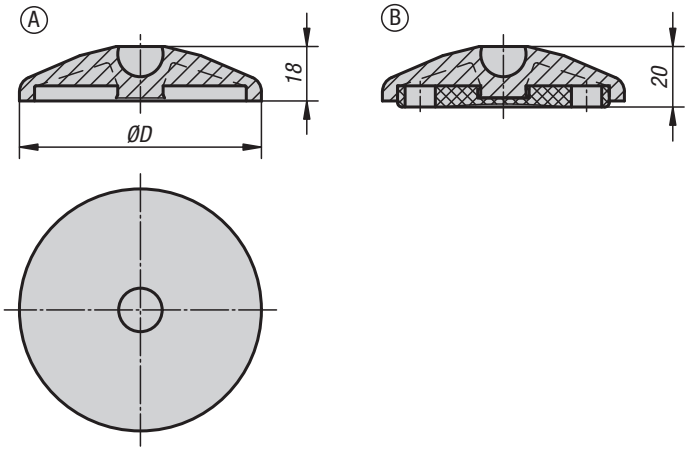

Material:
Plates, thermoplastic, glass bead reinforced.
Anti-slip plate thermoplastic elastomer.

Version:
black.

Sample order:
K0415.11040

Note for ordering:
If the swivel foot plate and the threaded spindle or ball joint are to be supplied assembled, please add the suffix **"assembled"** to the order number for the plate and the spindle or ball joint.
(e.g. K0415.1030 and K0421.060151 **"assembled"**.)

Note:
Swivel feet consist of a plate and a threaded spindle or ball joint. Any plate can be combined with any threaded spindle or ball joint. The anti-slip plate absorbs vibrations and prevents the swivel foot slipping.
For matching threaded spindles see K0421.
For matching ball joints see K0422.

Safety:
These ESD products can also be used for devices, components and protection systems in areas with high risk of explosion.
Use of these ESD products prevents the occurrence of electrostatic spark discharges, eliminating the potential ignition of gases and dusts which could lead to explosions in enclosed spaces.
Manufacturers and operators must use and conform to ATEX directives for the protection of persons working in areas with high risk of explosion.
These ESD products are certified by TÜV-Süd in relation to their electrical discharge capability.

Target groups:
Device manufacturers required to conform to ATEX product directive 2014/34/EU.
Operators required to conform to ATEX worker protection directive 1999/92/EC.

Drawing reference:
Form A without screw-on hole, without anti-slip plate
Form B without screw-on hole, with anti-slip plate

KIPP Antistatic plate for swivel feet

Order No.	Form	D	Load rating max. kN
K0415.11040	A	40	9
K0415.11050	A	50	9
K0415.11060	A	60	9
K0415.12040	B	40	9
K0415.12050	B	50	9
K0415.12060	B	60	9

Notes

Swivel feet plates

die-cast zinc or stainless steel

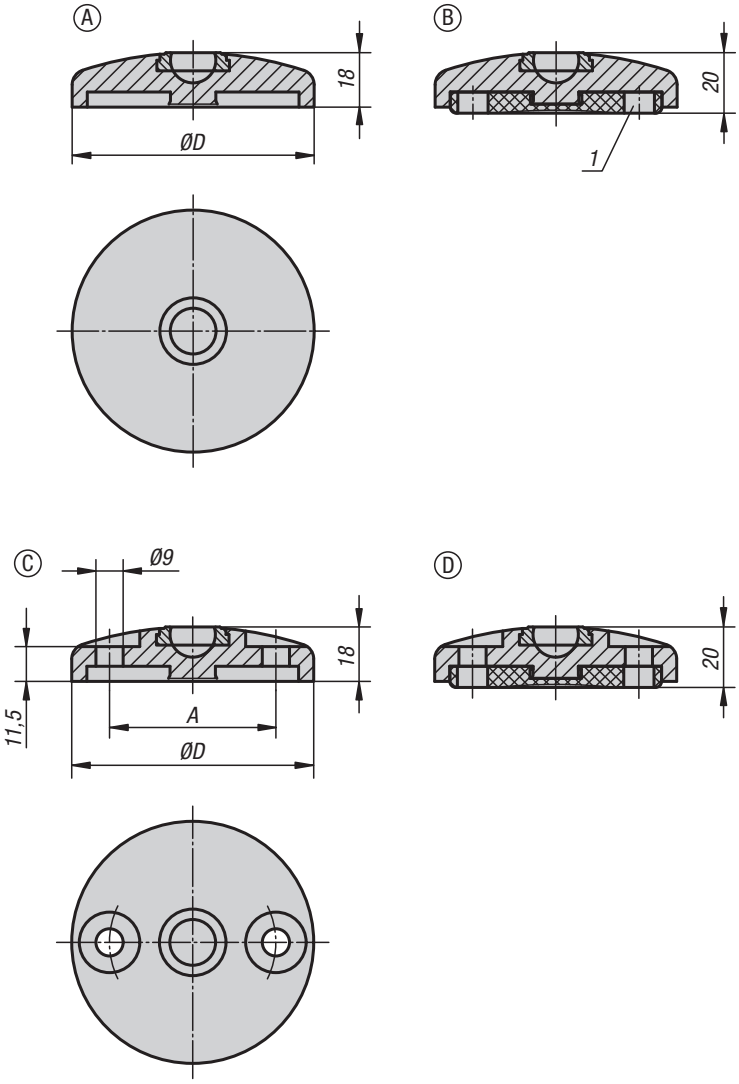

Material:
Plate die-cast zinc or stainless steel 1.4305.
Anti-slip plate thermoplastic elastomer.

Version:
Die-cast zinc plate, black powder-coated.
Stainless steel plate, bright.

Sample order:
K0416.10301
K0416.10301 and K0421.060151 **assembled**

Note for ordering:
If the swivel foot plate and the threaded spindle or the ball joint are to be supplied assembled, please add the suffix **"assembled"** to the order number for the plate and the spindle or the ball joint.
(e.g. K0416.10301 and K0421.060151 **assembled**).

Note:
Swivel feet consist of a plate and a threaded spindle or ball joint. Any plate can be combined with any threaded spindle or ball joint. The anti-slip plate absorbs vibrations and prevents the swivel foot slipping.
For matching threaded spindles see K0421.
For matching ball joints see K0422.

Drawing reference:
1) From plate Ø 80
Form A without screw-on hole, without anti-slip plate
Form B without screw-on hole, with anti-slip plate
Form C with screw-on hole (open), without anti-slip plate
Form D with screw-on hole (open), with anti-slip plate

Swivel feet plates

die-cast zinc or stainless steel

KIPP Swivel feet plates, die-cast zinc

Order No. Form A	Order No. Form B	D	Load rating max. kN
K0416.10301	K0416.20301	30	20
K0416.10401	K0416.20401	40	30
K0416.10451	K0416.20451	45	30
K0416.10501	K0416.20501	50	30
K0416.10601	K0416.20601	60	30
K0416.10801	K0416.20801	80	30
K0416.11001	K0416.21001	100	35
K0416.11201	K0416.21201	120	35

Order No. Form C	Order No. Form D	D	A	Load rating max. kN
K0416.30801	K0416.40801	80	55	30
K0416.31001	K0416.41001	100	74	35
K0416.31201	K0416.41201	120	94	35

KIPP Swivel feet plates, stainless steel

Order No. Form A	Order No. Form B	D	Load rating max. kN
K0416.10302	K0416.20302	30	20
K0416.10402	K0416.20402	40	30
K0416.10452	K0416.20452	45	30
K0416.10502	K0416.20502	50	35
K0416.10602	K0416.20602	60	35
K0416.10802	K0416.20802	80	35
K0416.11002	K0416.21002	100	40
K0416.11202	K0416.21202	120	40

Order No. Form C	Order No. Form D	D	A	Load rating max. kN
K0416.30802	K0416.40802	80	55	35
K0416.31002	K0416.41002	100	74	40
K0416.31202	K0416.41202	120	94	40

Swivel feet plates extended

plastic

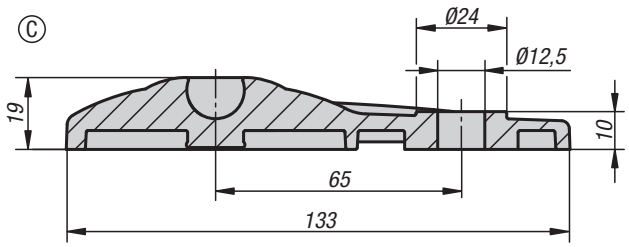

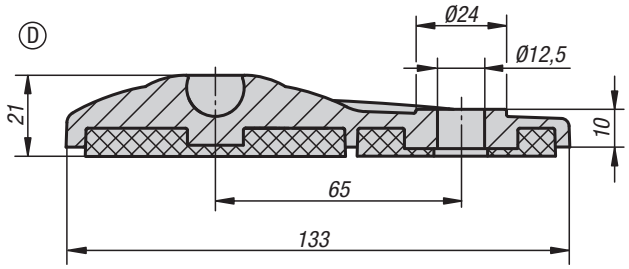

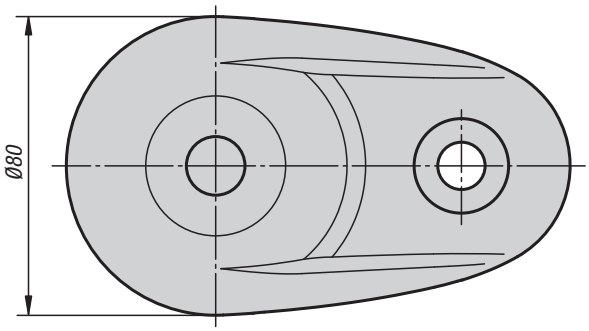

Material:
Plates, thermoplastic, fibreglass reinforced.
Anti-slip plate thermoplastic elastomer.

Version:
black.

Sample order:
K0654.1030
K0654.1030 and K0421.060151 **assembled**

Note for ordering:
If the swivel foot plate and the threaded spindle or ball joint are to be supplied assembled, please add the suffix **"assembled"** to the order number for the plate and the spindle or ball joint.
(e.g. K0654.30803 and K0421.060151 **assembled**.)

Note:
Swivel feet consist of a plate and a threaded spindle or ball joint. Any plate can be combined with any threaded spindle or ball joint. The anti-slip plate absorbs vibrations and prevents the swivel foot slipping.
For matching threaded spindles see K0421.
For matching ball joints see K0422.

Drawing reference:
Form C with screw-on hole, without anti-slip plate
Form D with screw-on hole, with anti-slip plate

KIPP Swivel feet plates extended, plastic

Order No.	Form	Load rating max. kN
K0654.30803	C	10
K0654.40803	D	10

Swivel feet plates extended

die-cast zinc

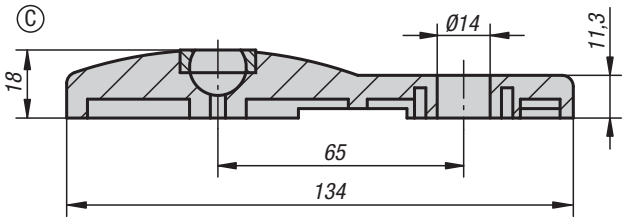

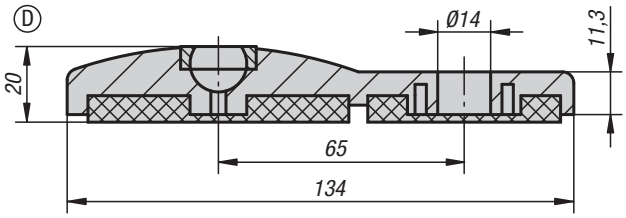

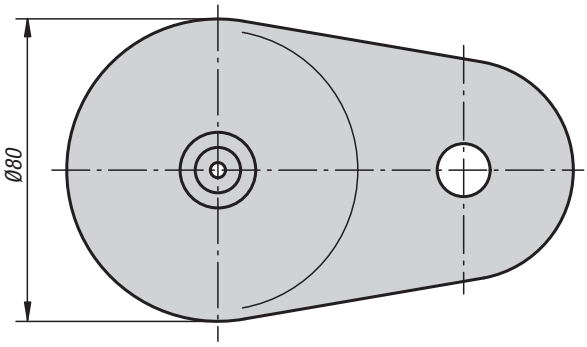

Material:
Plate die-cast zinc.
Anti-slip plate thermoplastic elastomer.

Version:
Plate black powder-coated.

Sample order:
K0417.30801
K0417.30801 and K0421.060151 **assembled**

Note for ordering:
If the swivel foot plate and the threaded spindle or ball joint are to be supplied assembled, please add the suffix **"assembled"** to the order number for the plate and the spindle or ball joint.
(e.g. K0417.30801 and K0421.060151 **assembled**.)

Note:
Swivel feet consist of a plate and a threaded spindle or ball joint. Any plate can be combined with any threaded spindle or ball joint. The anti-slip plate absorbs vibrations and prevents the swivel foot slipping.
For matching threaded spindles see K0421.
For matching ball joints see K0422.

Drawing reference:
Form C with screw-on hole, without anti-slip plate
Form D with screw-on hole, with anti-slip plate

KIPP Swivel feet plates extended, die-cast zinc

Order No.	Form	Load rating max. kN
K0417.30801	C	30
K0417.40801	D	30

Swivel feet plates

stainless steel

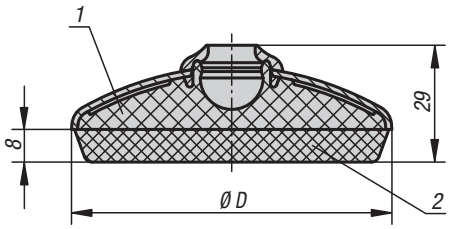

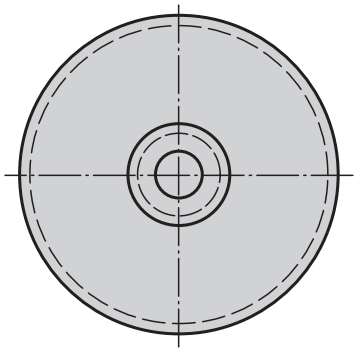

Material:
Plates, stainless steel 1.4301.
Core, thermoplastic PA.
Rubber support TPE.

Version:
Plate bright.
Rubber support light grey with sealing lip, hardness 70 Shore A.
Temp. range -20°C to +100°C.

Sample order:
K0418.1060
K0418.1060 and K0421.060152 **assembled**

Note for ordering:
If the swivel foot plate and the threaded spindle or ball joint are to be supplied assembled, please add the suffix **"assembled"** to the order number for the plate and the spindle or ball joint. (e.g. K0418.1060 and K0421.060152 **assembled**.)

Note:
The rubber support is joined with the stainless steel plate and the PA core by injection moulding. The rubber support is resistant to oil and water (up to 60 °C). In addition, it is furnished with antibacterial and antimicrobial protection and is thus outstandingly suited for sectors in the food industry.

Swivel feet consist of a plate and a threaded spindle or ball joint. Any plate can be combined with any threaded spindle or ball joint.
For matching threaded spindles see K0421.
For matching ball joints see K0422.

Drawing reference:
1) PA-core
2) rubber base

KIPP Swivel feet plates, stainless steel

Order No.	D	Load rating max. kN
K0418.1060	58,5	7
K0418.1080	78,5	7
K0418.1100	98,5	7

Technical information
Swivel feet and plates with vibration absorption

Natural frequency:
Every sprung weight, such as a machine or piece of equipment, that is standing on swivel feet with vibration absorbers vibrates after an initial impetus at its own natural frequency (resonance frequency). In the diagram to the side (Fig. 1) the natural frequency of Sylomer V12 under pressure by various forces can be read. The optimum range of use is with a pressure of ≤ 0.4 N/mm. A maximum pressure of 0.6 N/mm should not be exceeded.

Interference frequency:
The frequency emitted by a machine or a piece of equipment is known as its interference frequency. Effective vibration absorption is dependent on the interference frequency (the frequency to be absorbed) and the natural frequecy of the absorption unit. The greater the difference in frequency between the natural frequency and the interference frequency, the better the absorption. An absorbing effect will only be achieved if the interference frequency is over √2 times the natural frequency of the absorption unit.

Fig. 1

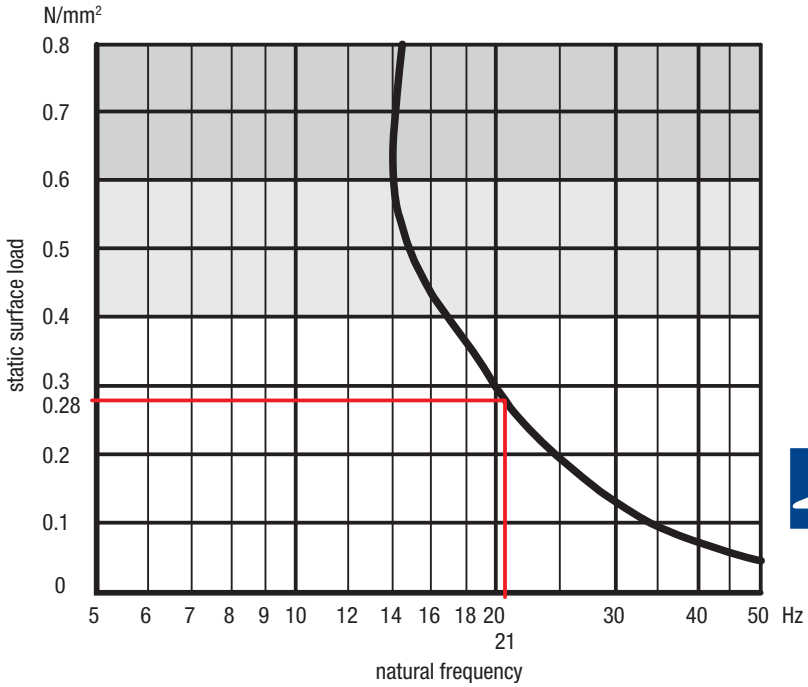

Calculation example:

Swivel foot: M12, D1=30,5
Loading: 300N

Pressure: $\frac{F}{A} = \frac{300\ N}{529{,}5\ mm^2} = 0{,}57\ N/mm^2$

$> 0{,}4\ N/mm^2$

Swivel foot: M16, D1=40,5
Loading: 300N

Pressure: $\frac{F}{A} = \frac{300\ N}{1087{,}2\ mm^2} = \mathbf{0{,}28\ N/mm^2}$

$< 0{,}4\ N/mm^2$

The M16 swivel foot is chosen since the pressure is ≤ 0.4 N/mm².
From Fig. 1, a pressure of **0.28 N/mm²** gives a natural frequency of **21 Hz**.
With an interference frequency of **44 Hz** an absorption effect of 69% is achieved (Fig. 2).

Fig. 2

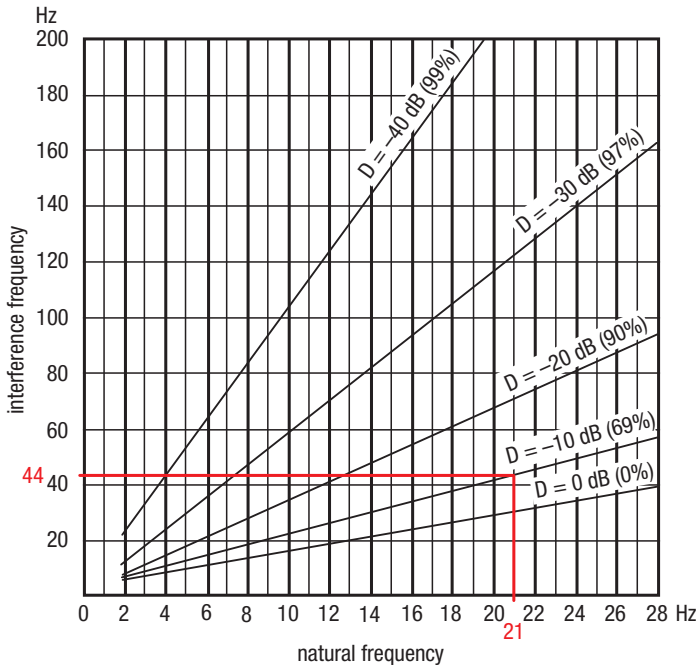

Swivel feet plates

with vibration absorption

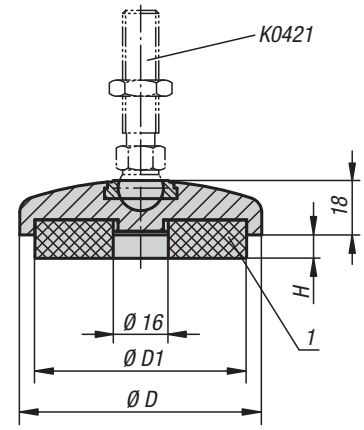

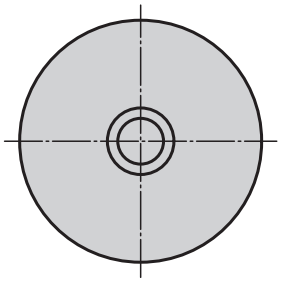

Material:
Plate die-cast zinc or stainless steel 1.4305.
Damper plate PUR elastomere (Sylomer V12).

Version:
Die-cast zinc plate, black powder-coated.
Stainless steel plate, bright.
Damper plate, grey, glued in, anti-slip.
Temp. range -30 °C to +70 °C.

Sample order:
K0419.20601
K0419.20601 and K0421.060151 **assembled**

Note for ordering:
If the swivel foot plate and the threaded spindle or ball joint are to be supplied assembled, please add the suffix **"assembled"** to the order number for the plate and the spindle or ball joint.
(e.g. K0419.20601 and K0421.060151 **assembled**.)

Note:
The load rating given in the table is a recommendation of the **permanent static** load up to which the absorption unit should be used. This static load corresponds to a surface pressure of 0.4 N/mm², at which the material achieves its optimum absorption properties. Here it is taken into account that under dynamic demands an additional load, up to 0.6 N/mm² may occur. The damper plate absorbs vibrations and prevents the swivel foot slipping. Swivel feet consist of a plate and a threaded spindle or ball joint. Any plate can be combined with any threaded spindle or ball joint.
For matching threaded spindles see K0421.
For matching ball joints see K0422.

Drawing reference:
1) damper plate

KIPP Swivel feet plates, die-cast zinc

Order No.	D	D1	H by 0 / 0.4 / 0.6 N/mm²	Load rating N (by 0.4 N/mm²)
K0419.20401	40	30,5	7 / 5,9 / 4,8	62
K0419.20501	50	40,5	7 / 5,9 / 4,8	212
K0419.20601	60	50	7 / 5,9 / 4,8	433
K0419.20801	80	68	7 / 5,9 / 4,8	614

KIPP Swivel feet plates, stainless steel

Order No.	D	D1	H by 0 / 0.4 / 0.6 N/mm²	Load rating N (by 0.4 N/mm²)
K0419.20402	40	30,5	7 / 5,8 / 4,9	212
K0419.20502	50	40,5	7 / 5,8 / 4,9	435
K0419.20602	60	50	7 / 5,8 / 4,9	705
K0419.20802	80	68	7 / 5,8 / 4,9	1372

Machine feet

with vibration absorption

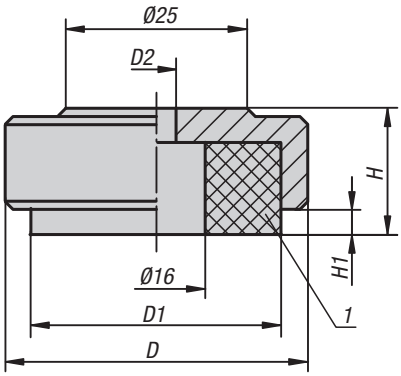

Material:
Plate steel.
Damper plate PUR elastomer (Sylomer V12).

Version:
Plate blue passivated.
Damper plate grey, glued in, anti-slip.
Temp. range -30 °C to +70 °C.

Sample order:
K0670.046

Note:
The load rating given in the table is a recommendation of the **permanent static** load up to which the damper plate should be used. This static load corresponds to a surface pressure of 0.4 N/mm², at which the material reaches its optimum absorption properties. Here it is taken into account that under dynamic loading an additional load of up to 0.6 N/mm² may occur. The damper plate absorbs vibrations and prevents the machine foot slipping.

Drawing reference:
1) damper plate

KIPP Machine feet with vibration absorption

Order No.	Main material	D	D1	D2	H	H1 by 0 / 0.4 / 0.6 N/mm²	Load rating N (by 0.4 N/mm²)
K0670.036	steel	36	30,5	5,5	15	4 / 2,8 / 1,9	212
K0670.046	steel	46	40,5	6,6	17	4 / 2,8 / 1,9	435
K0670.056	steel	56	50	9	19	4 / 2,8 / 1,9	705
K0670.074	steel	74	68	9	21	4 / 2,8 / 1,9	1372

Modular structure of a levelling foot

Application:
Levelling feet are of modular design. The components can be individually combined to match the application. Levelling feet can be used on machines, plants and even office furniture.

Modular design:
The levelling feet consist of two components - a plate and a threaded spindle. **Any** plate can be combined with **any** threaded spindle (see Fig. 1).

Levelling feet height:
Regardless of the plate or threaded spindle size, levelling feet always have a minimum height of H = 30 mm (see Fig. 2). The height of the complete levelling foot is calculated from the length of the threaded spindle + 30 mm. (Total height of levelling foot = L + 30 mm).

Fig. 1

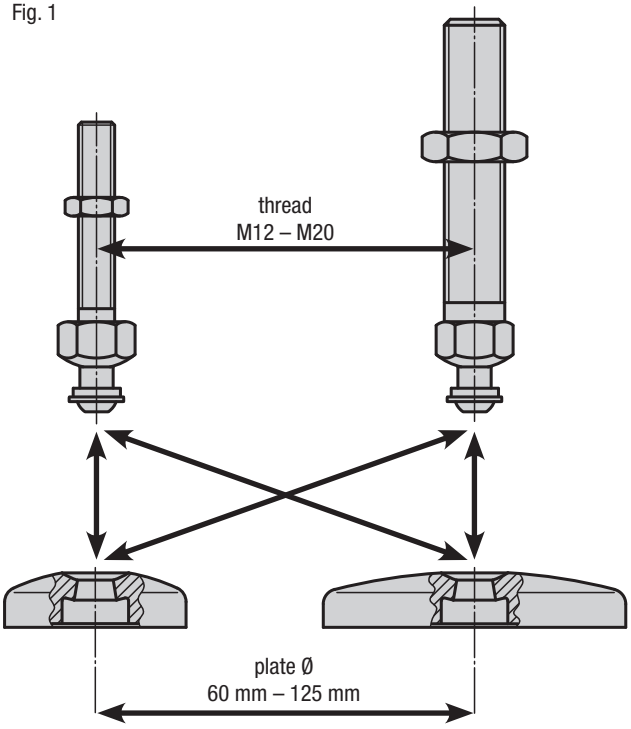

Fig. 2

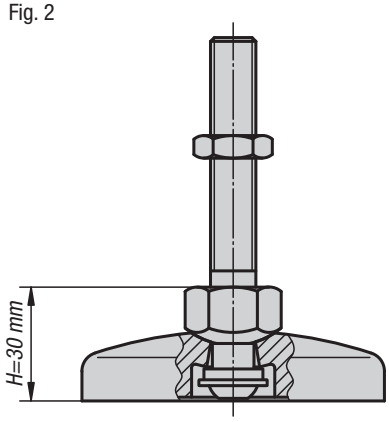

Inclination angle of threaded spindle:

Assembly:
Insert the threaded spindle vertically into the levelling foot plate and fasten it from underneath with a spacer ring, washer and screw (no unintentional loosening of threaded spindle from the plate). If necessary, the two fastening holes (closed) in the levelling foot plate can be opened by simply punching them out to allow the levelling foot to be bolted to the floor.

Note for ordering:
If the levelling foot plate and the threaded spindle are to be supplied assembled, please add the suffix **"assembled"** to the order number for the plate and spindle (see sample order on the relevant product page).

Levelling feet threaded spindles

steel or stainless steel

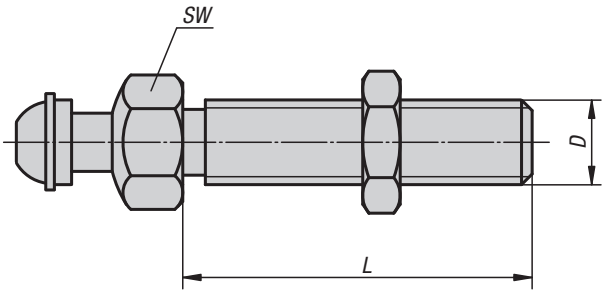

Material:
Steel or 1.4305 stainless steel

Version:
Steel blue passivated.
Stainless steel, bright.

Sample order:
K0427.120661
K0427.120661 and K0423.1060 **assembled**

Note for ordering:
If the threaded spindle and the levelling foot plate are to be supplied assembled, please add the suffix **"assembled"** to the order number for the spindle and plate. (e.g. K0427.120661 and K0423.1060 **assembled**.)

Note:
Levelling feet consist of a plate and a threaded spindle. Any plate can be combined with any threaded spindle. The height of the complete levelling foot is calculated from the length of the threaded spindle + 30 mm. (Total height of levelling foot = L + 30 mm)

KIPP Levelling feet threaded spindles steel or stainless steel

Order No. Steel	Order No. Stainless steel	D	L	SW	Load rating max. kN
K0427.120661	K0427.120662	M12	66	22	7,7
K0427.121001	K0427.121002	M12	100	22	7,7
K0427.121251	K0427.121252	M12	125	22	7,7
K0427.121501	K0427.121502	M12	150	22	7,7
K0427.160661	K0427.160662	M16	66	22	14,5
K0427.161001	K0427.161002	M16	100	22	14,5
K0427.161251	K0427.161252	M16	125	22	14,5
K0427.161501	K0427.161502	M16	150	22	14,5
K0427.162001	K0427.162002	M16	200	22	14,5
K0427.201001	K0427.201002	M20	100	22	24,3
K0427.201251	K0427.201252	M20	125	22	24,3
K0427.201501	K0427.201502	M20	150	22	24,3
K0427.202001	K0427.202002	M20	200	22	24,3

Levelling feet plates

plastic

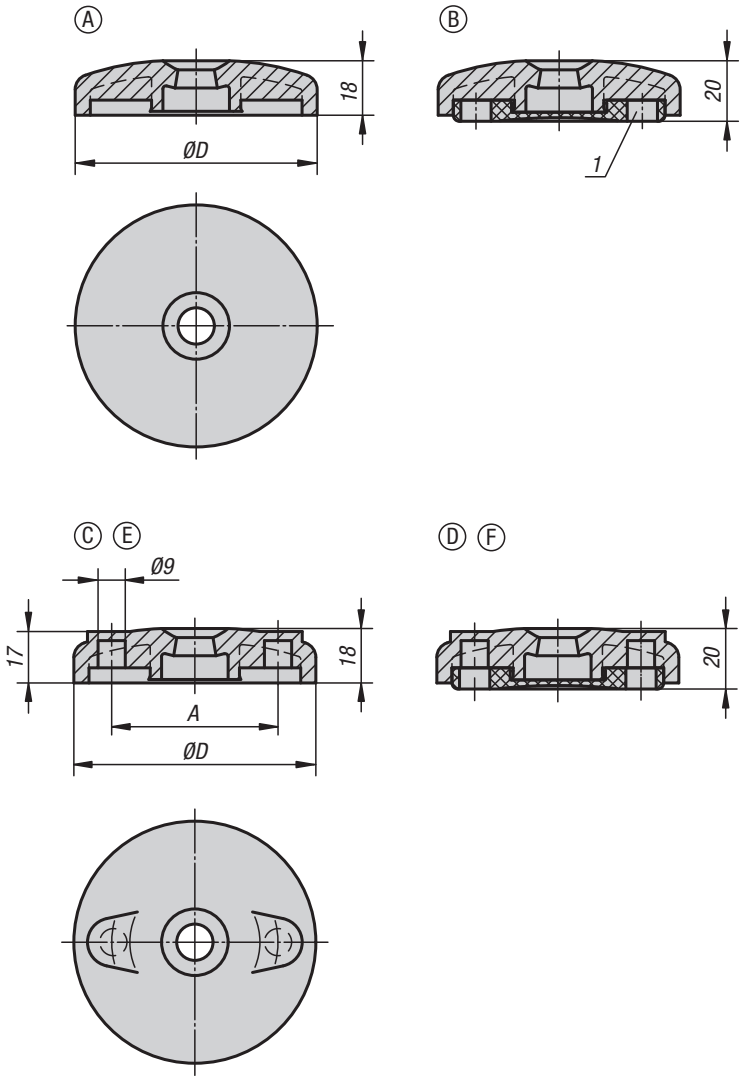

Material:
Plates, thermoplastic, fibreglass reinforced.
Anti-slip plate thermoplastic elastomer.

Version:
black.

Sample order:
K0423.1060
K0423.1060 and K0427.120661 **assembled**

Note for ordering:
If the levelling foot plate and the threaded spindle are to be supplied assembled, please add the suffix **"assembled"** to the order number for the plate and spindle. (e.g. K0423.1060 and K0427.120661 **assembled**.)

Note:
Levelling feet consist of a plate and a threaded spindle. Any plate can be combined with any threaded spindle. The anti-slip plate absorbs vibrations and prevents the levelling foot slipping.
For matching threaded spindles see K0427.

Drawing reference:
1) From plate Ø 80
Form A without screw-on hole, without anti-slip plate
Form B without screw-on hole, with anti-slip plate
Form C with screw-on hole (closed), without anti-slip plate
Form D with screw-on hole (closed), with anti-slip plate
Form E with screw-on hole (open), without anti-slip plate
Form F with screw-on hole (open), with anti-slip plate

KIPP Levelling feet plates plastic

Order No. Form A	Order No. Form B	D	Load rating max. kN
K0423.1060	**K0423.2060**	60	12
K0423.1080	**K0423.2080**	80	12
K0423.1100	**K0423.2100**	100	12

Order No. Form C	Order No. Form D	Order No. Form E	Order No. Form F	D	A	Load rating max. kN
K0423.3080	**K0423.4080**	**K0423.5080**	**K0423.6080**	80	55	12
K0423.3100	**K0423.4100**	**K0423.5100**	**K0423.6100**	100	74	12

Levelling feet plates

plastic, heavy-duty version

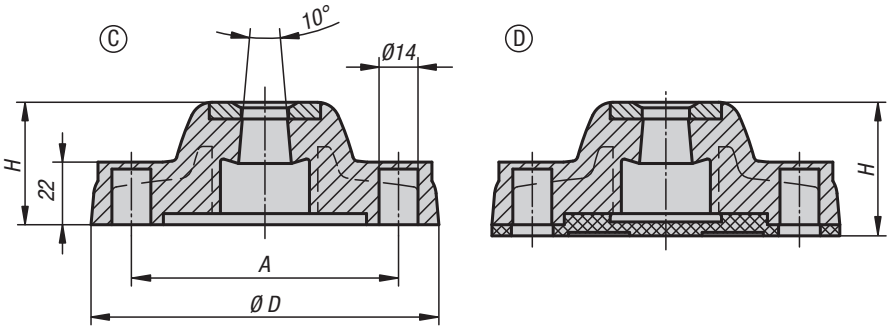

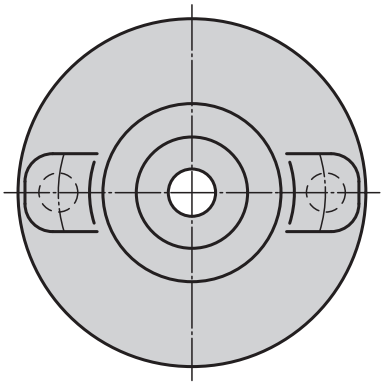

Material:
Plates, thermoplastic, fibreglass reinforced.
Anti-slip plate thermoplastic elastomer.

Version:
black.

Sample order:
K0424.31251
K0424.31251 and K0427.120661 **assembled**

Note for ordering:
If the levelling foot plate and the threaded spindle are to be supplied assembled, please add the suffix **"assembled"** to the order number for the plate and spindle.
(e.g. K0424.31251 and K0427.120661 **assembled**.)

Note:
Levelling feet consist of a plate and a threaded spindle.
Any plate can be combined with any threaded spindle.
The anti-slip plate absorbs vibrations and prevents the levelling foot slipping.
For matching threaded spindles see K0427.

Drawing reference:
Form C with screw-on hole (closed), without anti-slip plate
Form D with screw-on hole (closed), with anti-slip plate

KIPP Levelling feet plates, plastic, heavy-duty version

Order No.	Form	D	A	H	Load rating max. kN
K0424.31251	C	125	96	44	18
K0424.31751	C	175	135	45	25
K0424.41251	D	125	96	48	18
K0424.41751	D	175	135	49	25

Levelling feet plates

die-cast zinc or stainless steel

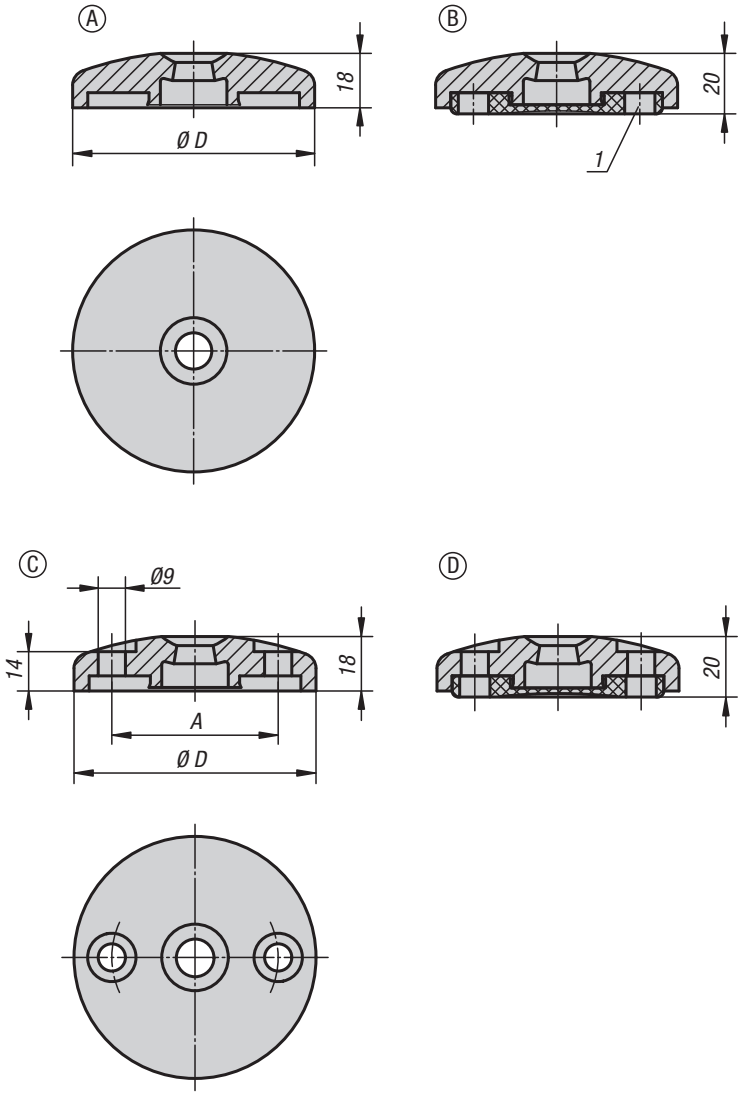

Material:
Plate die-cast zinc or stainless steel 1.4305.
Anti-slip plate thermoplastic elastomer.

Version:
Die-cast zinc plate, black powder-coated.
Stainless steel plate, bright.

Sample order:
K0425.10601
K0425.10601 and K0427.120661 **assembled**

Note for ordering:
If the levelling foot plate and the threaded spindle are to be supplied assembled, please add the suffix **"assembled"** to the order number for the plate and spindle.
(e.g. K0425.10601 and K0427.120661 **assembled**).

Note:
Levelling feet consist of a plate and a threaded spindle. Any plate can be combined with any threaded spindle.
The anti-slip plate absorbs vibrations and prevents the levelling foot slipping.
For matching threaded spindles see K0427.

Drawing reference:
1) From plate Ø 80
Form A without screw-on hole, without anti-slip plate
Form B without screw-on hole, with anti-slip plate
Form C with screw-on hole (open), without anti-slip plate
Form D with screw-on hole (open), with anti-slip plate

Levelling feet plates

die-cast zinc or stainless steel

KIPP Levelling feet plates die-cast zinc

Order No. Form A	Order No. Form B	D	Load rating max. kN
K0425.10401	-	40	20
K0425.10451	-	45	25
K0425.10501	-	50	25
K0425.10601	K0425.20601	60	35
K0425.10801	K0425.20801	80	35
K0425.11001	K0425.21001	100	35
K0425.11201	K0425.21201	120	35

Order No. Form C	Order No. Form D	D	A	Load rating max. kN
K0425.30801	K0425.40801	80	55	35
K0425.31001	K0425.41001	100	74	35

KIPP Levelling feet plates stainless steel

Order No. Form A	Order No. Form B	D	Load rating max. kN
K0425.10602	K0425.20602	60	45
K0425.10802	K0425.20802	80	45
K0425.11002	K0425.21002	100	45

Order No. Form C	Order No. Form D	D	A	Load rating max. kN
K0425.30802	K0425.40802	80	55	45
K0425.31002	K0425.41002	100	74	45

Levelling feet plates extended

die-cast zinc

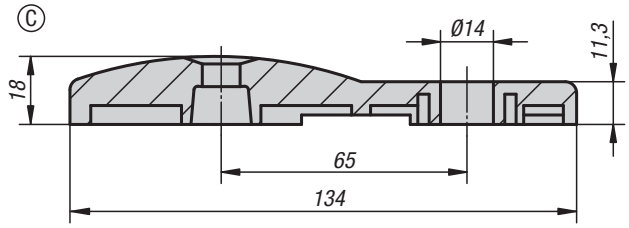

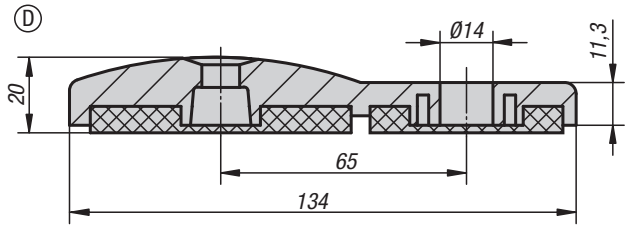

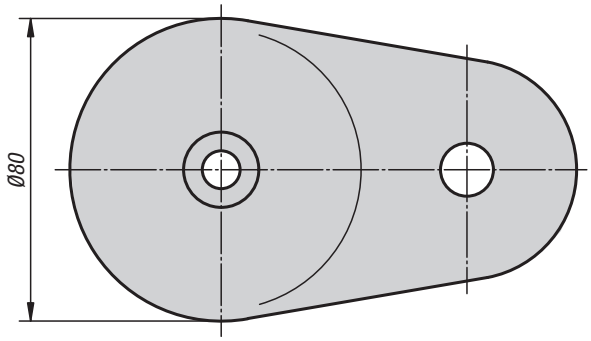

Material:
Plate die-cast zinc.
Anti-slip plate thermoplastic elastomer.

Version:
Plate black powder-coated.

Sample order:
K0426.30801
K0426.30801 and K0427.120661 **assembled**

Note for ordering:
If the levelling foot plate and the threaded spindle are to be supplied assembled, please add the suffix **"assembled"** to the order number for the plate and spindle.
(e.g. K0426.30801 and K0427.120661 **assembled**.)

Note:
Levelling feet consist of a plate and a threaded spindle. Any plate can be combined with any threaded spindle. The anti-slip plate absorbs vibrations and prevents the levelling foot slipping.
For matching threaded spindles see K0427.

Drawing reference:
Form C with screw-on hole, without anti-slip plate
Form D with screw-on hole, with anti-slip plate

KIPP Levelling feet plates extended die-cast zinc

Order No.	Form	Load rating max. kN
K0426.30801	C	35
K0426.40801	D	35

Notes

Modular structure of an ECO-Line levelling foot

Application:
ECO-Line levelling feet are of modular design. The components can be individually combined to match the application. However, the threaded spindle is not screwed but pressed in permanently. The levelling feet are used for a wide range of machines, plants and even office furniture.

Modular design:
The levelling feet consist of two components - a plate and a threaded spindle. **Any** plate can be combined with **any** threaded spindle (see Fig. 1).

Fig. 1

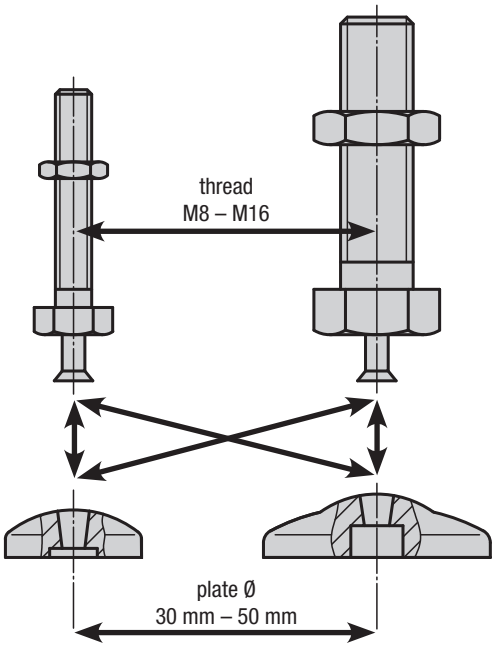

Assembly:
Place levelling foot plate on threaded spindle and press pin in up to collar (threaded spindle cannot be inadvertently removed from plate).

Fig. 2

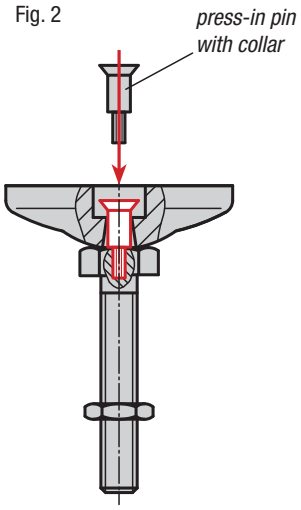

Inclination angle of threaded spindle:

Note for ordering:
If the levelling foot plate and the threaded spindle are to be supplied assembled, please add the suffix **"assembled"** to the order number for the plate and spindle (see sample order on the relevant product page).

Levelling feet ECO-Line threaded spindles

steel or stainless steel

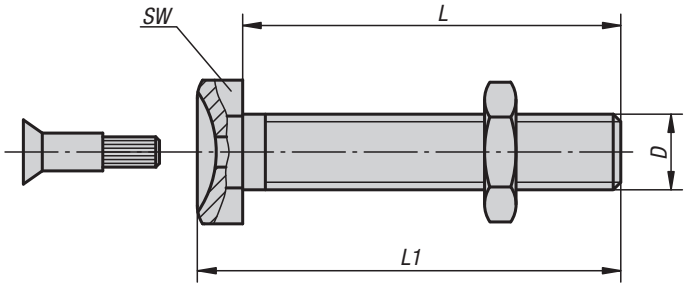

Material:
Steel or 1.4305 stainless steel

Version:
Steel blue passivated.
Stainless steel, bright.

Sample order:
K0429.101201
K0429.101201 and K0428.10301 **assembled**

Note for ordering:
If the threaded spindle and the levelling foot plate are to be supplied assembled, please add the suffix **"assembled"** to the order number for the spindle and plate.
(e.g. K0429.080251 and K0428.10301 **assembled**.)

Note:
ECO-Line levelling feet consist of a threaded spindle and a plate. Any threaded spindle can be combined with any plate.

KIPP Levelling feet ECO-Line threaded spindles steel or stainless steel

Order No. Steel	Order No. Stainless steel	D	L	L1	SW	Load rating max. kN
K0429.080251	K0429.080252	M8	25	29,5	13	3,5
K0429.080401	K0429.080402	M8	40	44,5	13	3,5
K0429.080501	K0429.080502	M8	50	54,5	13	3,5
K0429.080701	K0429.080702	M8	70	74,5	13	3,5
K0429.080801	K0429.080802	M8	80	84,5	13	3,5
K0429.081001	K0429.081002	M8	100	104,5	13	3,5
K0429.081201	K0429.081202	M8	120	124,5	13	3,5
K0429.100251	K0429.100252	M10	25	30	17	4,7
K0429.100401	K0429.100402	M10	40	45	17	4,7
K0429.100501	K0429.100502	M10	50	55	17	4,7
K0429.100701	K0429.100702	M10	70	75	17	4,7
K0429.100801	K0429.100802	M10	80	85	17	4,7
K0429.101001	K0429.101002	M10	100	105	17	4,7
K0429.101201	K0429.101202	M10	120	125	17	4,7
K0429.120251	K0429.120252	M12	25	31	19	7,7
K0429.120401	K0429.120402	M12	40	46	19	7,7
K0429.120501	K0429.120502	M12	50	56	19	7,7
K0429.120701	K0429.120702	M12	70	76	19	7,7
K0429.120801	K0429.120802	M12	80	86	19	7,7
K0429.121001	K0429.121002	M12	100	106	19	7,7
K0429.121201	K0429.121202	M12	120	126	19	7,7
K0429.160501	K0429.160502	M16	50	58,5	24	14,5
K0429.161001	K0429.161002	M16	100	108,5	24	14,5
K0429.161501	K0429.161502	M16	150	158,5	24	14,5

Levelling feet plates ECO-Line

die-cast zinc, stainless steel or plastic

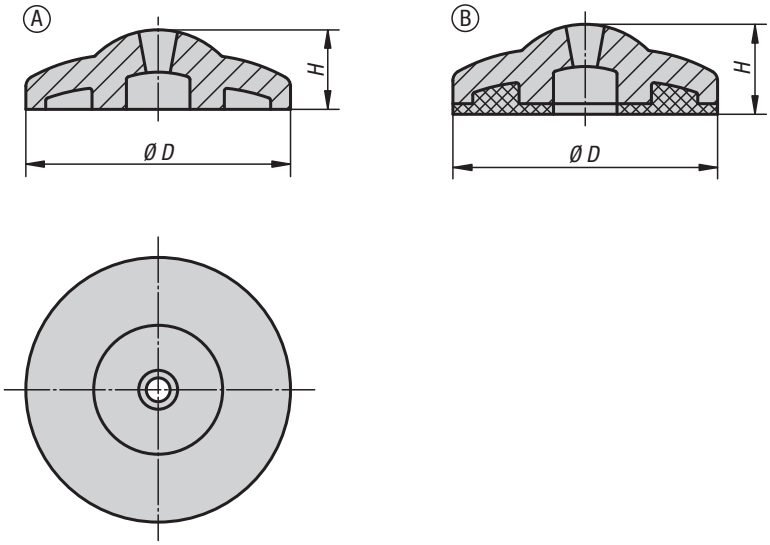

Material:
Plate thermoplastic, die-cast zinc or stainless steel 1.4305.
Anti-slip plate thermoplastic elastomer.

Version:
Thermoplastic plate black.
Die-cast zinc plate blue galvanized.
Stainless steel plate bright.

Sample order:
K0428.10303
K0428.10303 and K0429.080801 **assembled**

Note for ordering:
If the levelling foot plate and the threaded spindle are to be supplied assembled, please add the suffix **"assembled"** to the order number for the plate and spindle.
(e.g. K0428.10303 and K0429.080801 **"assembled"**.)

Note:
ECO-Line levelling feet consist of a plate and a threaded spindle. Any plate can be combined with any threaded spindle.
The anti-slip plate absorbs vibrations and prevents the levelling foot slipping.
For matching threaded spindles see K0429.

Drawing reference:
Form A without anti-slip plate
Form B with anti-slip plate

KIPP Levelling feet plates ECO-Line die-cast zinc

Order No.	Form	D	H	Load rating max. kN
K0428.10301	A	30	11,5	16
K0428.10401	A	40	12	18
K0428.10501	A	50	14,5	20
K0428.20301	B	30	13,5	16
K0428.20401	B	40	14,5	18
K0428.20501	B	50	17,5	20

Levelling feet plates ECO-Line

die-cast zinc, stainless steel or plastic

KIPP Levelling feet plates ECO-Line stainless steel

Order No.	Form	D	H	Load rating max. kN
K0428.10302	A	30	11,5	22
K0428.10402	A	40	12	24
K0428.10502	A	50	14,5	26
K0428.20302	B	30	13,5	22
K0428.20402	B	40	14,5	24
K0428.20502	B	50	17,5	26

KIPP Levelling feet plates ECO-Line plastic

Order No.	Form	D	H	Load rating max. kN
K0428.10303	A	30	11,5	15
K0428.10403	A	40	12	15
K0428.10503	A	50	14,5	15
K0428.20303	B	30	13,5	15
K0428.20403	B	40	14,5	15
K0428.20503	B	50	17,5	15

Levelling feet threaded spindles

steel or stainless steel

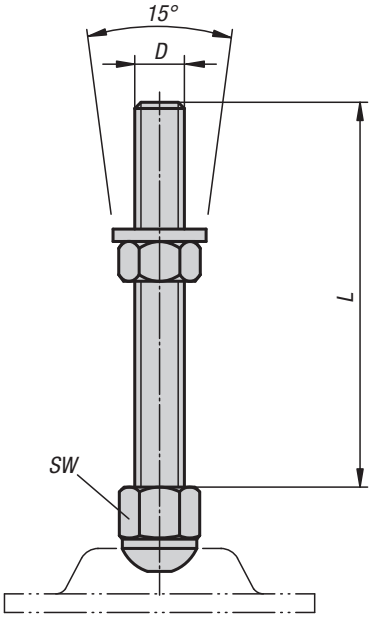

Material:
Steel or stainless steel 1.4301.

Version:
Steel galvanized.
Stainless steel bright.

Sample order:
K0669.080501
K0669.080501 and K0672.10801 **assembled**

Note for ordering:
If the levelling foot plate and the threaded spindle are to be supplied assembled, please add the suffix **"assembled"** to the order number for the plate and spindle.
(e.g. K0669.080501 and K0672.10801 **assembled**).

Note:
Levelling feet consist of a plate and a threaded spindle. Any threaded spindle can be combined with any plate.

KIPP Levelling feet threaded spindles steel or stainless steel

Order No. Steel	Order No. Stainless steel	D	L	SW	Load rating max. kN
K0669.080501	K0669.080502	M8	50	17	40
K0669.080801	K0669.080802	M8	80	17	40
K0669.081001	K0669.081002	M8	100	17	40
K0669.081201	K0669.081202	M8	120	17	40
K0669.081501	K0669.081502	M8	150	17	40
K0669.100501	K0669.100502	M10	50	17	40
K0669.100801	K0669.100802	M10	80	17	40
K0669.101001	K0669.101002	M10	100	17	40
K0669.101201	K0669.101202	M10	120	17	40
K0669.101501	K0669.101502	M10	150	17	40
K0669.120501	K0669.120502	M12	50	19	40
K0669.120801	K0669.120802	M12	80	19	40
K0669.121001	K0669.121002	M12	100	19	40
K0669.121201	K0669.121202	M12	120	19	40
K0669.121501	K0669.121502	M12	150	19	40
K0669.160501	K0669.160502	M16	50	24	40
K0669.160801	K0669.160802	M16	80	24	40
K0669.161001	K0669.161002	M16	100	24	40
K0669.161201	K0669.161202	M16	120	24	40
K0669.161501	K0669.161502	M16	150	24	40
K0669.200501	K0669.200502	M20	50	30	40
K0669.200801	K0669.200802	M20	80	30	40
K0669.201001	K0669.201002	M20	100	30	40
K0669.201201	K0669.201202	M20	120	30	40
K0669.201501	K0669.201502	M20	150	30	40

Levelling feet plates

steel or stainless steel

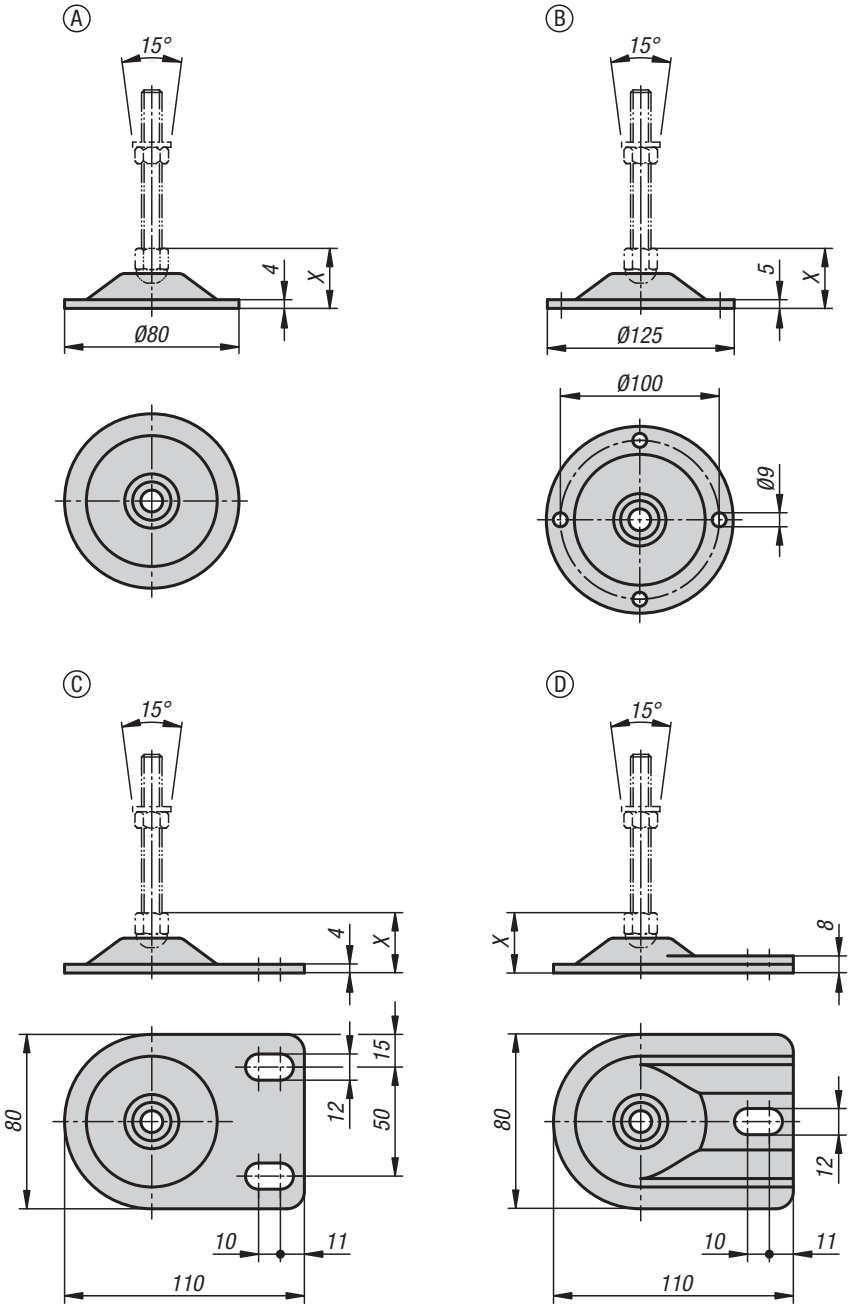

①

A, C, D: M8/M10 = 31 mm
M12 = 32 mm
M16 = 36 mm
M20 = 39 mm

B: M8/M10 = 46 mm
M12 = 48 mm
M16 = 51 mm
M20 = 54 mm

Material:
Plate steel or stainless steel 1.4301.

Version:
Steel chrome-plated.
Stainless steel Form A and B polished.
Stainless steel Form C and D glass-bead blasted.

Sample order:
K0672.10801 K0672.10801 and K0669.080501 **assembled**

Note for ordering:
If the levelling foot plate and the threaded spindle are to be supplied assembled, please add the suffix **"assembled"** to the order number for the plate and spindle
(e.g. K0672.10801 and K0669.080501 **assembled**).

Note:
Levelling feet consist of a plate and a threaded spindle. Any plate can be combined with any threaded spindle.
For matching threaded spindles, see K0669.

Drawing reference:
1) X with spindle size:

KIPP Levelling feet plates steel or stainless steel

Order No. Steel	Order No. Stainless steel	Form	Load rating max. kN
K0672.10801	K0672.10802	A	20
K0672.21251	K0672.21252	B	40
K0672.30801	K0672.30802	C	20
K0672.40801	K0672.40802	D	20

Levelling feet plates with rubber base

steel or stainless steel

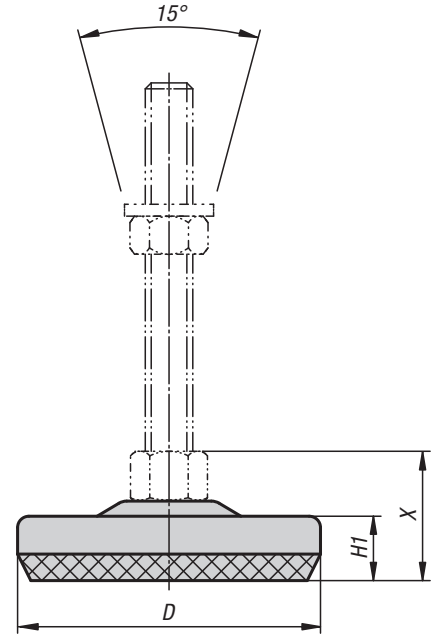

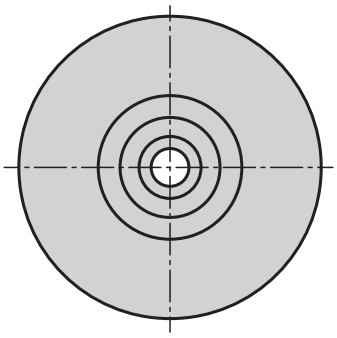

D = 80 :

①
M8/M10 = 37 mm
M12 = 38 mm
M16 = 42 mm
M20 = 45 mm

D = 100 :

①
M8/M10 = 39 mm
M12 = 40 mm
M16 = 44 mm
M20 = 47 mm

Material:
Plate steel or stainless steel 1.4301.
Rubber base NBR, 70 Shore A.

Version:
Steel chromed.
Stainless steel polished.

Sample order:
K0673.10801
K0673.10801 and K0669.080501 **assembled**

Note for ordering:
If the levelling foot plate and the threaded spindle are to be supplied assembled, please add the suffix **"assembled"** to the order number for the plate and spindle
(e.g. K0673.10801 and K0669.080501 **assembled**).

Note:
Levelling feet consist of a plate and a threaded spindle. Any plate can be combined with any threaded spindle. For matching threaded spindles see K0669.

Drawing reference:
1) X with spindle size:

KIPP Levelling feet plates with rubber base steel or stainless steel

Order No. Steel	Order No. Stainless steel	D	H1	Load rating max. kN
K0673.10801	**K0673.10802**	80	17	8,5
K0673.11001	**K0673.11002**	100	19	20

Notes

Levelling feet

steel or stainless steel

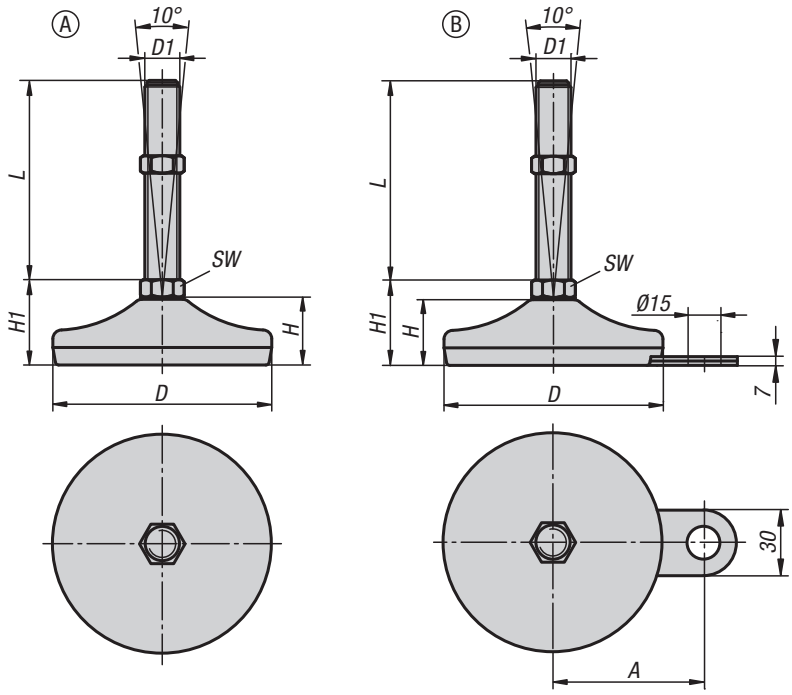

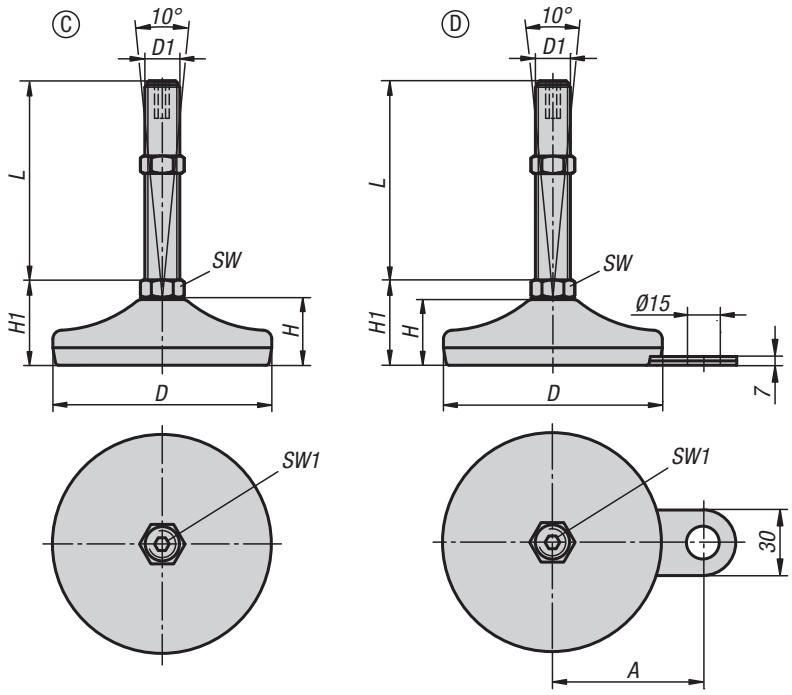

Material:
Foot plate and threaded spindle steel or stainless steel.
Rubber support (NBR) 80 Shore.

Version:
Foot plate, galvanized or polished.
Threaded spindle, galvanized or bright.
Rubber support, vulcanised, black.

Sample order:
K0739.1108010X50
(include length L)

Note:
Levelling feet steel or stainless steel with pivoting threaded spindle and rubber base. The solid rubber base is permanently vulcanised to the sheet metal plate. The rubber base has an excellent surface grip. It is sound damping and impedes transmission of vibrations and impacts to the floor.

The load values specified in the table are based on a test series, in which a static load was applied perpendicular to the plates through the centre of the spindle. Radially acting forces such as those produced by vibrations or other shaking effects, affect the load rating and are not taken into account for the specified values.

For stainless steel feet from spindle size M16, the wrench sizes apply across two flats.

Supplied with matching nut.

KIPP Form A

Order No.	Form	Main material	D	D1	H	H1	SW	L	Load rating max. kN
K0739.1105010X	A	steel	50	M10	19	29	14	50/100	4
K0739.1105012X	A	steel	50	M12	19	29	14	50/100/150	4
K0739.1106010X	A	steel	60	M10	22	32	14	50/100	7
K0739.1106012X	A	steel	60	M12	22	32	14	50/100/150	7
K0739.1108010X	A	steel	80	M10	25	35	14	50/100	10
K0739.1108012X	A	steel	80	M12	25	35	14	50/100/150	10
K0739.1108014X	A	steel	80	M14	25	35	14	50/100/150	10
K0739.1108016X	A	steel	80	M16	25	35	16	100/150	10
K0739.1108020X	A	steel	80	M20	25	36	20	75/100/150/200	10
K0739.1110020X	A	steel	100	M20	28	38,5	20	75/100/150/200/250	15
K0739.1110024X	A	steel	100	M24	28	38,5	24	100/150/200/250	15
K0739.1112020X	A	steel	120	M20	32	42,5	20	100/150/200	30
K0739.1112024X	A	steel	120	M24	32	42,5	24	100/150/200	30
K0739.1112030X	A	steel	120	M30	32	43,5	30	100/150/200	30
K0739.1205010X	A	stainless steel	50	M10	19	29	14	50/100	4
K0739.1205012X	A	stainless steel	50	M12	19	29	14	50/100/150	4
K0739.1206010X	A	stainless steel	60	M10	22	32	14	50/100	7
K0739.1206012X	A	stainless steel	60	M12	22	32	14	50/100/150	7
K0739.1208010X	A	stainless steel	80	M10	25	35	14	50/75/100/125	10
K0739.1208012X	A	stainless steel	80	M12	25	35	14	50/75/100/125/150	10
K0739.1208014X	A	stainless steel	80	M14	25	35	14	75/100/125/150/175	10
K0739.1208016X	A	stainless steel	80	M16	25	35	13	75/100/125/150/175	10
K0739.1208020X	A	stainless steel	80	M20	25	38	17	75/100/125/150/175/200/225	10
K0739.1210020X	A	stainless steel	100	M20	30	43	17	75/100/125/150/175/200	15
K0739.1210024X	A	stainless steel	100	M24	30	44	20	100/125/150/175/200	15
K0739.1212020X	A	stainless steel	120	M20	32	43	17	100/150/200	30
K0739.1212024X	A	stainless steel	120	M24	32	44	20	100/150/200	30
K0739.1212030X	A	stainless steel	120	M30	32	47	26	100/150/200	30

KIPP Form B with fastening tab

Order No.	Form	Main material	A	D	D1	H	H1	SW	L	Load rating max. kN
K0739.2106010X	B	steel	45	60	M10	22	32	14	50/100	7
K0739.2106012X	B	steel	45	60	M12	22	32	14	50/100/150	7
K0739.2108010X	B	steel	54	80	M10	25	35	14	50/100	10
K0739.2108012X	B	steel	54	80	M12	25	35	14	50/100/150	10
K0739.2108014X	B	steel	54	80	M14	25	35	14	50/100/150	10
K0739.2108016X	B	steel	54	80	M16	25	35	16	100/150	10
K0739.2108020X	B	steel	54	80	M20	25	36	20	75/100/150/200	10
K0739.2110020X	B	steel	69	100	M20	28	38,5	20	75/100/150/200/250	15
K0739.2110024X	B	steel	69	100	M24	28	38,5	24	100/150/200/250	15
K0739.2206010X	B	stainless steel	45	60	M10	22	32	14	50/100	7
K0739.2206012X	B	stainless steel	45	60	M12	22	32	14	50/100/150	7
K0739.2208010X	B	stainless steel	54	80	M10	25	35	14	50/75/100/125	10
K0739.2208012X	B	stainless steel	54	80	M12	25	35	14	50/75/100/125/150	10
K0739.2208014X	B	stainless steel	54	80	M14	25	35	14	75/100/125/150/175	10
K0739.2208016X	B	stainless steel	54	80	M16	25	35	13	75/100/125/150/175	10
K0739.2208020X	B	stainless steel	54	80	M20	25	38	17	75/100/125/150/175/200/225	10
K0739.2210020X	B	stainless steel	69	100	M20	30	43	17	75/100/125/150/175/200	15
K0739.2210024X	B	stainless steel	69	100	M24	30	44	20	100/125/150/175/200	15

Levelling feet

steel or stainless steel

KIPP Form C with hexagon socket

Order No.	Form	Main material	D	D1	H	H1	SW	L	Load rating max. kN
K0739.3105010X	C	steel	50	M10	19	29	14	50	4
K0739.3105012X	C	steel	50	M12	19	29	14	50/100	4
K0739.3105016X	C	steel	50	M16	19	29	16	75/100/150	4
K0739.3106010X	C	steel	60	M10	22	32	14	50	7
K0739.3106012X	C	steel	60	M12	22	32	14	50/100	7
K0739.3106016X	C	steel	60	M16	22	33	16	75/100/150	7
K0739.3108016X	C	steel	80	M16	25	35	16	100/150	10
K0739.3108020X	C	steel	80	M20	25	36	20	75	10
K0739.3110020X	C	steel	100	M20	28	38,5	20	100/150	15
K0739.3110024X	C	steel	100	M24	28	38,5	24	200	15
K0739.3112020X	C	steel	120	M20	32	42,5	20	100/150/200	30
K0739.3112024X	C	steel	120	M24	32	42,5	24	100/150/200	30
K0739.3112030X	C	steel	120	M30	32	43,5	30	100/150/200	30
K0739.3205010X	C	stainless steel	50	M10	19	29	14	50	4
K0739.3205012X	C	stainless steel	50	M12	19	29	14	50/100	4
K0739.3205016X	C	stainless steel	50	M16	19	29	16	75/100/150/200	4
K0739.3206010X	C	stainless steel	60	M10	22	32	14	50	7
K0739.3206012X	C	stainless steel	60	M12	22	32	14	50/100	7
K0739.3206016X	C	stainless steel	60	M16	22	33	16	75/100/150/200	7
K0739.3208016X	C	stainless steel	80	M16	25	35	13	75/100/125/150/175	10
K0739.3208020X	C	stainless steel	80	M20	25	38	17	75/200	10
K0739.3210020X	C	stainless steel	100	M20	30	43	17	150	15
K0739.3212020X	C	stainless steel	120	M20	32	43	17	100/150/200	30
K0739.3212024X	C	stainless steel	120	M24	32	45	20	100/150/200	30
K0739.3212030X	C	stainless steel	120	M30	32	47	26	100/150/200	30

KIPP Form D with hexagon socket and fastening tab

Order No.	Form	Main material	A	D	D1	H	H1	SW	SW1	L	Load rating max. kN
K0739.4106010X	D	steel	45	60	M10	22	32	14	5	50	7
K0739.4106012X	D	steel	45	60	M12	22	32	14	6	50/100	7
K0739.4106016X	D	steel	45	60	M16	22	33	16	8	75/100/150/200	7
K0739.4206010X	D	stainless steel	45	60	M10	22	32	14	5	50	7
K0739.4206012X	D	stainless steel	45	60	M12	22	32	14	6	50/100	7
K0739.4206016X	D	stainless steel	45	60	M16	22	33	16	8	75/100/150/200	7

Levelling feet

stainless steel for sterile areas

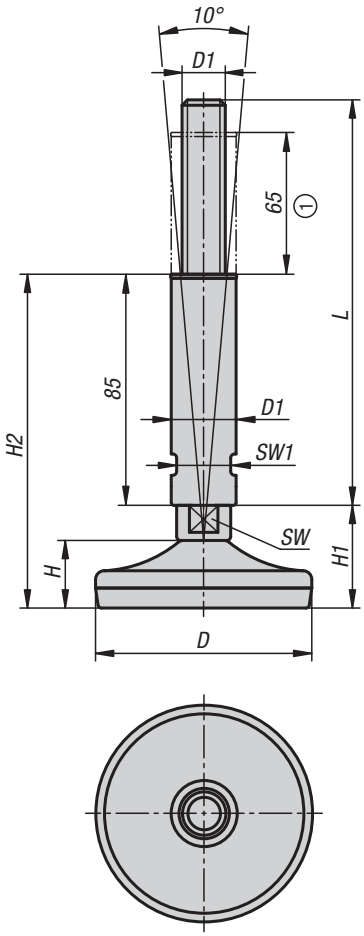

Material:
Stainless steel foot plate 1.4301.
Stainless steel threaded spindle 1.4301.
Rubber base and rubber seal (EPDM).

Version:
Foot plate, polished.
Threaded spindle, bright.
Rubber base black.
Rubber seal black.

Sample order:
K0741.08016X143

Note:
The levelling foot has an adjustment sleeve which covers the part of the thread. An O-ring is inserted inside the sleeve to prevent dirt from entering.

EPDM complies with the guidelines specified in the USDA documentation for rubber products.

The stainless steel levelling feet for sterile areas received the Equipment Acceptance Certificate of the USDA (US-Department of Agriculture).

The load values specified in the table are based on a test series in which a static load was applied perpendicular to the plates through the centre of the spindle. Radially acting forces such as those produced by vibrations or other shaking effects, affect the load rating and are not taken into account for the specified values.

Drawing reference:
1) Adjustment range

KIPP Levelling feet stainless steel for sterile areas

Order No.	D	D1	D2	H	H1	H2	SW	SW1	L	Load rating max. kN
K0741.08016X143	80	M16	24	25	38	123	17	20	150	10
K0741.08020X143	80	M20	30	25	38	123	17	26	150	10
K0741.10016X144	100	M16	24	30	43	128	17	20	150	15
K0741.10020X144	100	M20	30	30	43	128	17	26	150	15
K0741.10024X144	100	M24	35	30	44	129	20	30	150	15
K0741.12016X144	120	M16	24	32	45	130	17	20	150	30
K0741.12020X144	120	M20	30	32	45	130	17	26	150	30
K0741.12024X144	120	M24	35	32	46	131	20	30	150	30

Swivel feet

steel

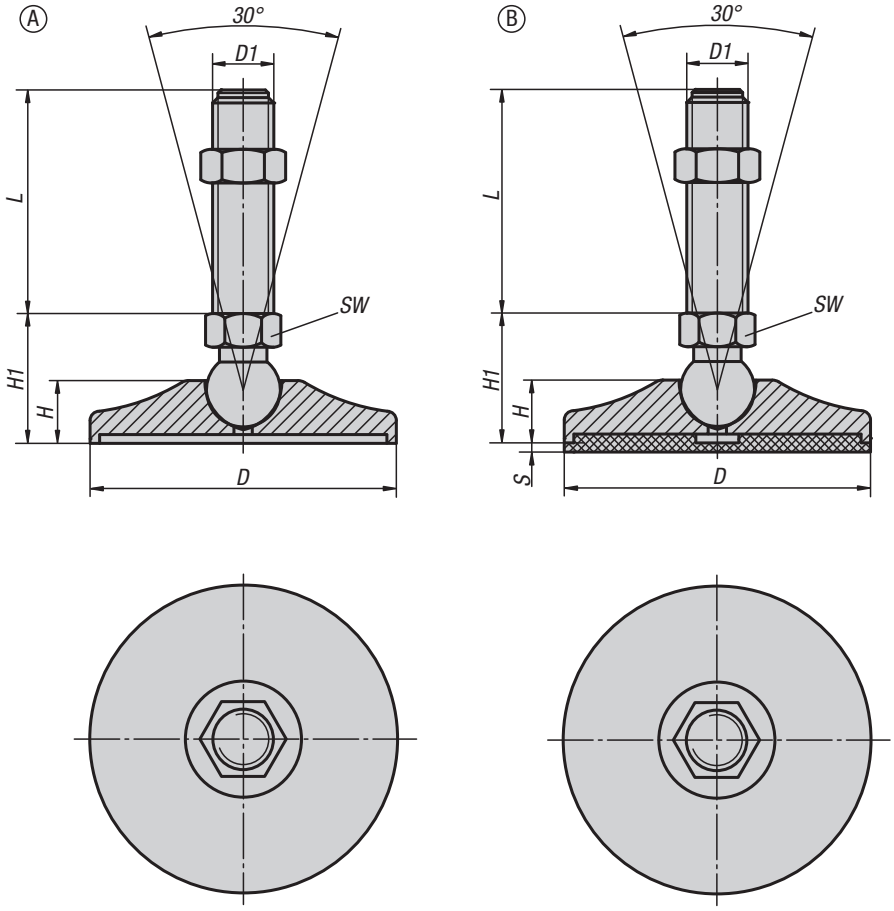

Material:
Foot plate and threaded spindle steel.
Anti-slip plate (NBR) 70 Shore.

Version:
Foot plate painted yellow.
Threaded spindle, galvanized.
Anti-slip plate black.

Sample order:
K0742.005010X25
(include length L)

Note:
High load rated steel swivel feet with yellow painted plate, optional with an anti-slip plate. The anti-slip plate absorbs vibrations and prevents the swivel foot slipping.

The load values specified in the table are based on a test series, in which a static load was applied perpendicular to the plates through the centre of the spindle. Radially acting forces such as those produced by vibrations or other shaking effects, affect the load rating and are not taken into account for the specified values.

Supplied with matching nut.

Drawing reference:
Form A without anti-slip plate
Form B with anti-slip plate

KIPP Swivel feet, steel

Order No. Form A	Order No. Form B	D	D1	H	H1	S	SW	L	Load rating max. kN
K0742.005010X	**K0742.105010X**	50	M10	16	28	-/3	14	25/50/75/100/125	15
K0742.005012X	**K0742.105012X**	50	M12	16	28	-/3	14	25/50/75/100/125	15
K0742.005014X	**K0742.105014X**	50	M14	16	28	-/3	14	25/50/75/100/125	15
K0742.006514X	**K0742.106514X**	65	M14	17	30	-/3	14	50/75/100/125/150	20
K0742.006516X	**K0742.106516X**	65	M16	17	30	-/3	16	50/75/100/125/150/175	20
K0742.008016X	**K0742.108016X**	80	M16	19,5	33	-/3	16	50/75/100/125/150/175/200	30
K0742.008020X	**K0742.108020X**	80	M20	19,5	36	-/3	17	75/100/125/150/175/200	30
K0742.010016X	**K0742.110016X**	100	M16	20	43	-/3	20	50/75/100/125/150/175/200	35
K0742.010020X	**K0742.110020X**	100	M20	20	43	-/3	20	75/100/125/150/175/200	45
K0742.010024X	**K0742.110024X**	100	M24	20	44	-/3	20	75/100/125/150/175/200	55

Levelling feet round

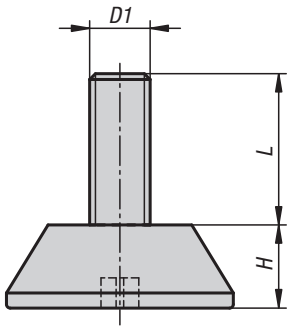

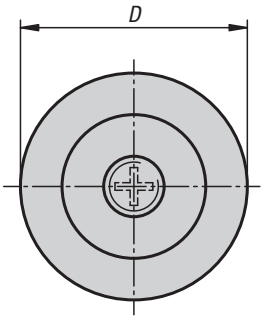

Material:
Polyamide.
Screw, steel.

Version:
Black.
Galvanized screw.

Sample order:
K0674.3006X020
(include length L)

Note:
Levelling feet with cross slot in the base as assembly aid.
Rigid version.

KIPP Levelling feet round

Order No.	D	D1	H	L	Load rating max. kN (static load only)
K0674.3006X	30	M6	11	20/30	3
K0674.3008X	30	M8	11	16/20/25/30/40	3
K0674.3010X	30	M10	11	25/30/35	3
K0674.4708X	47	M8	11	16/20/30/40	4
K0674.4710X	47	M10	11	20/30/55	4

Levelling feet round

with hex. collar

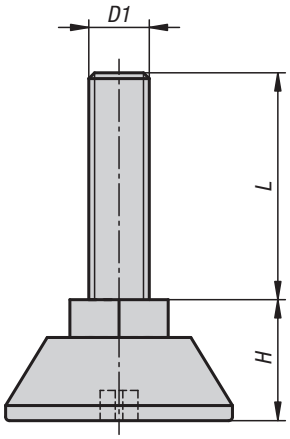

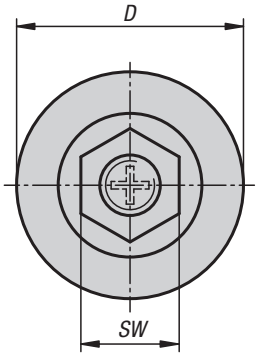

Material:
Polyamide.
Screw, steel.

Version:
Black.
Galvanized screw.

Sample order:
K0675.3006X020
(include length L)

Note:
Levelling feet with hexagonal collar and cross slot in the base as assembly aid. Rigid version.

KIPP Levelling feet round with hex. collar

Order No.	D	D1	H	SW	L	Load rating max. kN (static load only)
K0675.3006X	30	M6	16	13	20/30	3
K0675.3008X	30	M8	16	13	15/20/25/30/40	3
K0675.4708X	47	M8	16	13	15/20/30/40	4
K0675.4710X	47	M10	16	17	20/30	4

Levelling feet

with hex. base

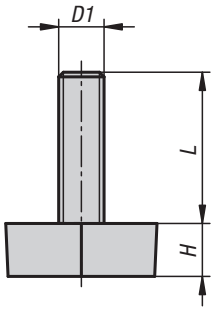

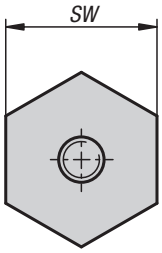

Material:
Polyethylene.
Screw, steel.

Version:
Black.
Galvanized screw.

Sample order:
K0676.2006X020
(include length L)

Note:
Levelling feet with hexagonal base.
Rigid version.

KIPP Levelling feet with hex. base

Order No.	D1	H	SW	L	Load rating max. kN (static load only)
K0676.2006X	M6	7	20	20/30/40/50	1,5
K0676.2008X	M8	7	20	20/30/40/50	3
K0676.2506X	M6	7,5	25	20/30/40/50	1,5
K0676.2508X	M8	7,5	25	20/30/40/50	3
K0676.2510X	M10	7,5	25	20/30	4
K0676.3008X	M8	8	30	20/30/40/50	3
K0676.3010X	M10	8	30	20/30	3

Levelling feet

with knurled base

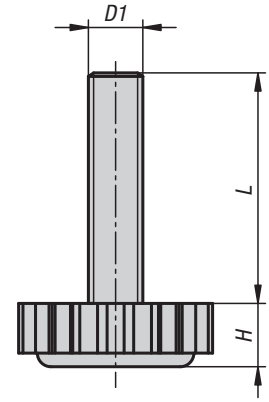

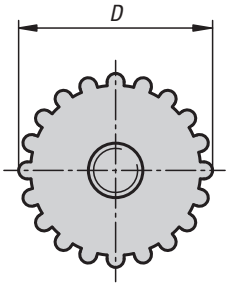

Material:
Polyamide.
Screw, steel.

Version:
Black.
Galvanized screw.

Sample order:
K0677.2805X016
(include length L)

Note:
Levelling feet with knurled base.
Rigid version.

KIPP Levelling feet with knurled base

Order No.	D	D1	H	L	Load rating max. kN (static load only)
K0677.2805X	28,5	M5	9,3	16/20/25/40	2
K0677.2806X	28,5	M6	9,3	16/20/30/40/50	3,5
K0677.2808X	28,5	M8	9,3	16/20/30/40/50/60/80	4,5

Notes

Levelling feet

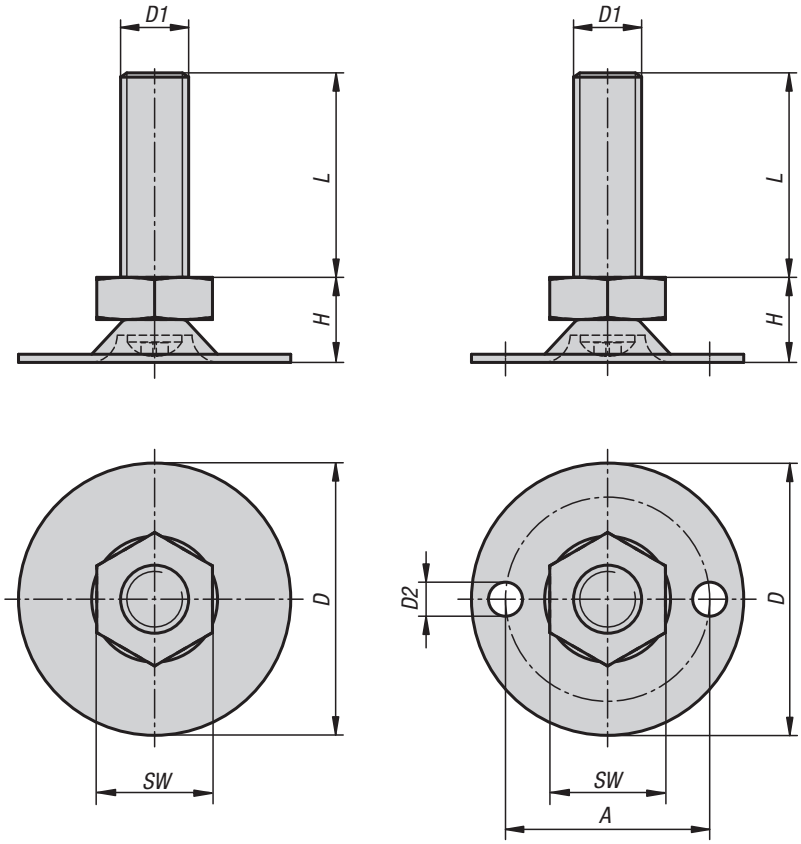

Material:
Foot plate and threaded spindle in steel.

Version:
Foot plate and threaded spindle, galvanized.

Sample order:
K0678.03008X016
(include length L)

Note:
The threaded spindle is pressed into the rotatable base.

KIPP Levelling feet

Order No. without hole	Order No. with hole	A	D	D1	D2	H	SW	L	Load rating max. kN (static load only)
K0678.03008X	**K0678.13008X**	-/24,3	30	M8	-/4	11	13	16/20/30/40/50	2,5
K0678.03010X	**K0678.13010X**	-/24,3	30	M10	-/4	12,5	17	16/20/30/40/50/60	3,5
K0678.04008X	**K0678.14008X**	-/30	40	M8	-/5	11	13	16/20/30/40/50	2,5
K0678.04010X	**K0678.14010X**	-/30	40	M10	-/5	11	17	16/20/30/40/50/60	3,5
K0678.05008X	**K0678.15008X**	-/35	50	M8	-/5,5	12,5	13	16/20/30/40/50	2,5
K0678.05010X	**K0678.15010X**	-/35	50	M10	-/5,5	14	17	16/20/30/40/50/60	3,5
K0678.06008X	**K0678.16008X**	-/46	60	M8	-/5,5	13,5	13	16/20/30/40/50	2,5
K0678.06010X	**K0678.16010X**	-/46	60	M10	-/5,5	15	17	16/20/30/40/50/60	3,5

Levelling feet caps

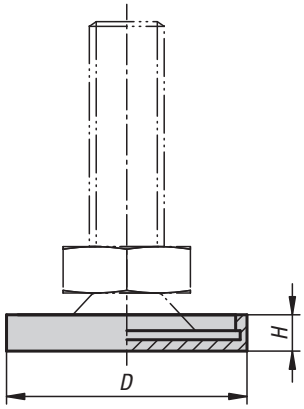

Material:
Polyethylene

Version:
black.

Sample order:
K0679.1030

Note:
The caps protect the surface against scratch marks.

KIPP Levelling feet caps

Order No.	for foot plate Ø	D	H
K0679.1030	30	31,8	4,8
K0679.1060	60	62	6,8

Machine feet

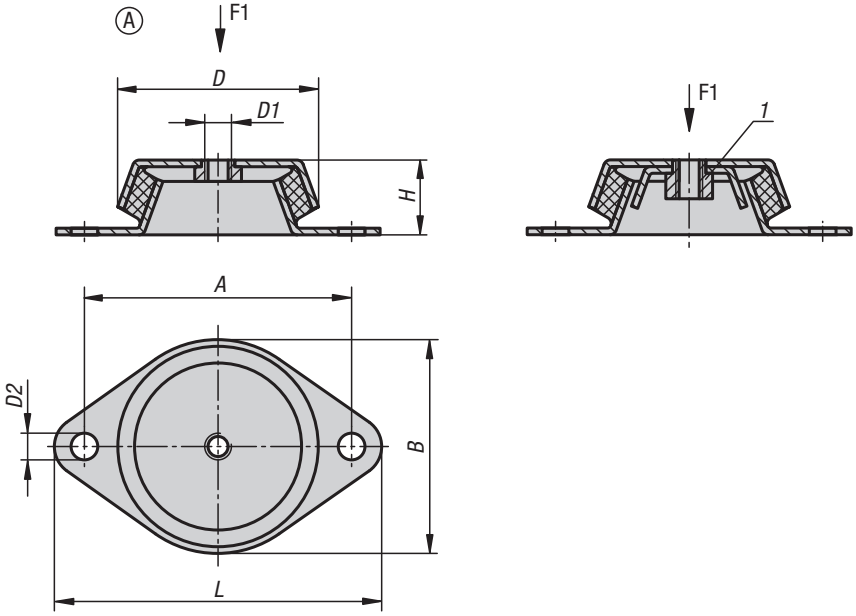

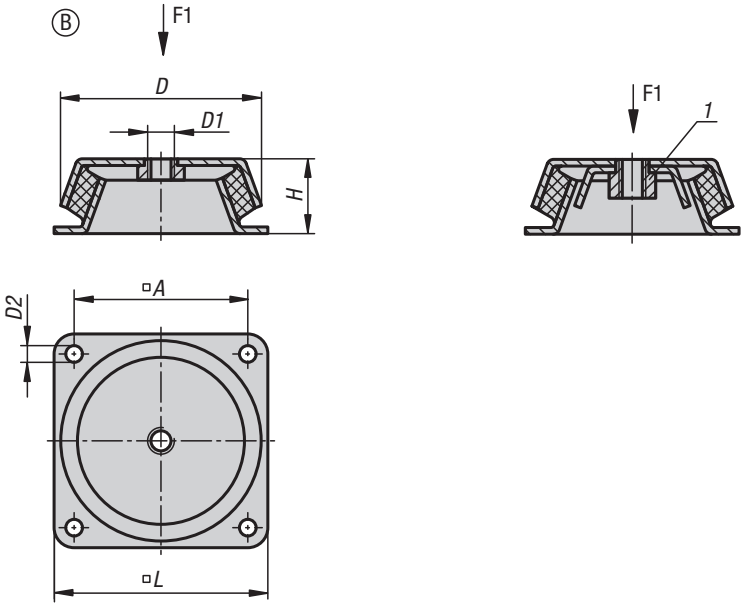

Material:
Metal parts, steel grade 5.6.
Elastomer, natural rubber,
medium hardness, Shore 60.

Version:
Steel galvanized.

Sample order:
K0687.062060

Note:
These machine feet have proven themselves to be universally applicable elements for the elastic support of all types of machine. They are commonly used wherever large horizontal movements are to be avoided. The horizontal rigidity is higher in all directions than the vertical rigidity. If used correctly they are excellent at preventing the transfer of vibration and noise.

Machine feet with shear protection are available for situations where tensile forces are to be expected.

The indicated load data are reference values for static loads by rubber hardness of Shore 60A.

On request:
Rubber hardness Shore 40 or 70 A.

Drawing reference:
1) With shear protection

KIPP Machine feet

Order No. without shear protection	Order No. with shear protection	Form	A	B	D	D1	D2	H	L	F1 (N)
K0687.062060	**K0687.062160**	A	85	66	62	M10	8,2	30	110	1500
K0687.078060	**K0687.078160**	A	110	78	78	M10	9	30	128	1800
K0687.092060	**K0687.092160**	A	110	96	86	M12	10,2	45	140	3000
K0687.106060	**K0687.106160**	A	140	110	106	M12	12,4	39	170	3600
K0687.150060	**K0687.150160**	B	132	-	150	M16	12,5	51	168	8000

Cup elements

type H2

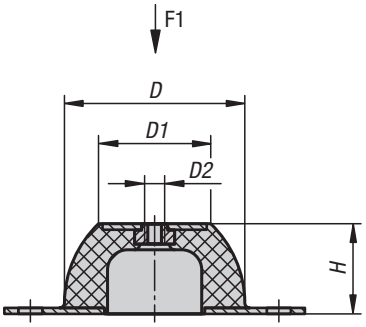

K0686.13006360
K0686.18008560

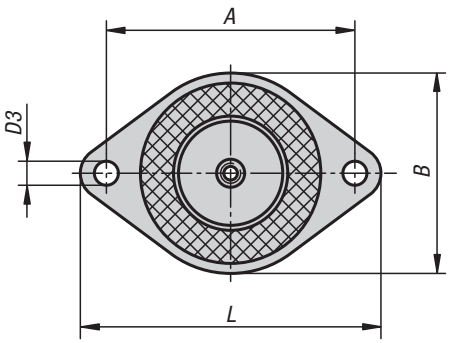

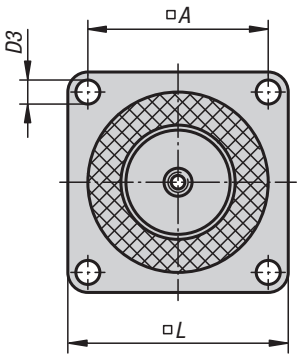

Material:
Metal parts, steel, grade 5.6.
Natural rubber, hardness Shore 40 or 60 A.

Version:
Steel galvanized.

Sample order:
K0686.03502040

Note:
The cup elements are highly elastic both in radial and in axial direction and therefore offer an outstanding impact isolation.
The special shaping of the cup elements allows isolation of sound and vibrations of machines and assemblies with a low natural frequency. They are especially suitable for supporting sensitive instruments and small devices.

The elements must not be subjected to tensile stress.

Temperature range:
-30°C to +80°C.

KIPP Cup elements type H2

Order No.	Version	A	B	D	D1	D2	D3	H	L	F1 (N)
K0686.03502040	hardness Shore 40A	50	43	35	18	M6	7	20	64	34
K0686.05002540	hardness Shore 40A	66	56	50	33	M8	8	25	85	200
K0686.07003540	hardness Shore 40A	92	76	70	45	M10	10	35	114	390
K0686.08504040	hardness Shore 40A	110	96	85	53	M10	11,5	40	136	680
K0686.09004540	hardness Shore 40A	124	101	90	58	M10	11,5	45	151	1280
K0686.13006340	hardness Shore 40A	120	-	130	78	M12	14,5	63	150	2700
K0686.18008540	hardness Shore 40A	160	-	180	100	M16	14,5	85	200	3700
K0686.03502060	hardness Shore 60A	50	43	35	18	M6	7	20	64	90
K0686.05002560	hardness Shore 60A	66	56	50	33	M8	8	25	85	490
K0686.07003560	hardness Shore 60A	92	76	70	45	M10	10	35	114	780
K0686.08504060	hardness Shore 60A	110	96	85	53	M10	11,5	40	136	1450
K0686.09004560	hardness Shore 60A	124	101	90	58	M10	11,5	45	151	2150
K0686.13006360	hardness Shore 60A	120	-	130	78	M12	14,5	63	150	4900
K0686.18008560	hardness Shore 60A	160	-	180	100	M16	14,5	85	200	7350

Tube inserts square

with tapped bush

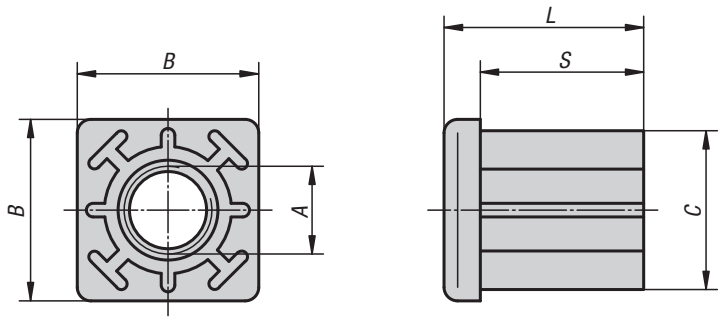

Material:
Body fibreglass reinforced thermoplastic.
Threaded insert brass.

Version:
Insert black.
Tapped bush nickel-plated.

Sample order:
K0430.103015

Note:
Threaded square inserts for attaching levelling feet, swivel feet and castors to square tubes.

KIPP Tube inserts square with tapped bush

Order No.	A	B	C	L	S	Suitable for square tubes	Load rating max. kN
K0430.103015	M10	30	27,5	33	27	30 x 1,5	5
K0430.123015	M12	30	27,5	33	27	30 x 1,5	5
K0430.143015	M14	30	27,5	33	27	30 x 1,5	5
K0430.163015	M16	30	27,5	33	27	30 x 1,5	5
K0430.103020	M10	30	26,5	33	27	30 x 2	5
K0430.123020	M12	30	26,5	33	27	30 x 2	5
K0430.143020	M14	30	26,5	33	27	30 x 2	5
K0430.163020	M16	30	26,5	33	27	30 x 2	5
K0430.104015	M10	40	37,5	43	35	40 x 1,5	8
K0430.124015	M12	40	37,5	43	35	40 x 1,5	8
K0430.144015	M14	40	37,5	43	35	40 x 1,5	8
K0430.164015	M16	40	37,5	43	35	40 x 1,5	8
K0430.204015	M20	40	37,5	43	35	40 x 1,5	8
K0430.104020	M10	40	36,5	43	35	40 x 2	10
K0430.124020	M12	40	36,5	43	35	40 x 2	10
K0430.144020	M14	40	36,5	43	35	40 x 2	10
K0430.164020	M16	40	36,5	43	35	40 x 2	10
K0430.204020	M20	40	36,5	43	35	40 x 2	10
K0430.104025	M10	40	35,5	43	35	40 x 2,5	10
K0430.124025	M12	40	35,5	43	35	40 x 2,5	10
K0430.144025	M14	40	35,5	43	35	40 x 2,5	10
K0430.164025	M16	40	35,5	43	35	40 x 2,5	10
K0430.204025	M20	40	35,5	43	35	40 x 2,5	10
K0430.104030	M10	40	34,5	43	35	40 x 3	10
K0430.124030	M12	40	34,5	43	35	40 x 3	10
K0430.144030	M14	40	34,5	43	35	40 x 3	10
K0430.164030	M16	40	34,5	43	35	40 x 3	10
K0430.204030	M20	40	34,5	43	35	40 x 3	10

Tube inserts square

with tapped bush

KIPP Tube inserts square with tapped bush

Order No.	A	B	C	L	S	Suitable for square tubes	Load rating max. kN
K0430.104040	M10	40	32,5	43	35	40 x 4	10
K0430.124040	M12	40	32,5	43	35	40 x 4	10
K0430.144040	M14	40	32,5	43	35	40 x 4	10
K0430.164040	M16	40	32,5	43	35	40 x 4	10
K0430.204040	M20	40	32,5	43	35	40 x 4	10
K0430.125015	M12	50	47,5	55	44	50 x 1,5	8
K0430.145015	M14	50	47,5	55	44	50 x 1,5	8
K0430.165015	M16	50	47,5	55	44	50 x 1,5	8
K0430.205015	M20	50	47,5	55	44	50 x 1,5	8
K0430.125020	M12	50	46,5	55	44	50 x 2	12
K0430.145020	M14	50	46,5	55	44	50 x 2	12
K0430.165020	M16	50	46,5	55	44	50 x 2	12
K0430.205020	M20	50	46,5	55	44	50 x 2	12
K0430.125025	M12	50	45,5	55	44	50 x 2,5	12
K0430.145025	M14	50	45,5	55	44	50 x 2,5	12
K0430.165025	M16	50	45,5	55	44	50 x 2,5	12
K0430.205025	M20	50	45,5	55	44	50 x 2,5	12
K0430.125030	M12	50	44,5	55	44	50 x 3	12
K0430.145030	M14	50	44,5	55	44	50 x 3	12
K0430.165030	M16	50	44,5	55	44	50 x 3	12
K0430.205030	M20	50	44,5	55	44	50 x 3	12
K0430.125040	M12	50	42,5	55	44	50 x 4	12
K0430.145040	M14	50	42,5	55	44	50 x 4	12
K0430.165040	M16	50	42,5	55	44	50 x 4	12
K0430.205040	M20	50	42,5	55	44	50 x 4	12
K0430.146020	M14	60	56,5	55	45	60 x 2	12
K0430.166020	M16	60	56,5	55	45	60 x 2	12
K0430.206020	M20	60	56,5	55	45	60 x 2	12
K0430.146030	M14	60	54,5	55	45	60 x 3	12
K0430.166030	M16	60	54,5	55	45	60 x 3	12
K0430.206030	M20	60	54,5	55	45	60 x 3	12
K0430.146040	M14	60	52,5	55	45	60 x 4	12
K0430.166040	M16	60	52,5	55	45	60 x 4	12
K0430.206040	M20	60	52,5	55	45	60 x 4	12

Tube inserts round

with tapped bush

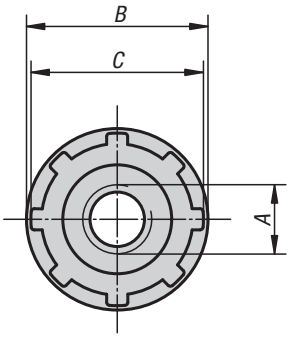

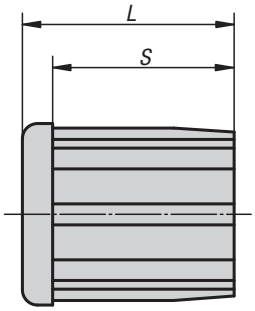

Material:
Body fibreglass reinforced thermoplastic.
Threaded insert brass.

Version:
Insert black.
Tapped bush nickel-plated.

Sample order:
K0431.103010

Note:
Threaded square inserts for attaching levelling feet, swivel feet and castors to round tubes.

KIPP Tube inserts round with tapped bush

Order No.	A	B	C	L	S	Suitable for tubes	Load rating max. kN
K0431.103010	M10	30	28,4	33	27	Ø 30 x 1	5
K0431.123010	M12	30	28,4	33	27	Ø 30 x 1	5
K0431.143010	M14	30	28,4	33	27	Ø 30 x 1	5
K0431.163010	M16	30	28,4	33	27	Ø 30 x 1	5
K0431.103815	M10	38	35,5	43	35	Ø 38 x 1,5	5
K0431.123815	M12	38	35,5	43	35	Ø 38 x 1,5	5
K0431.143815	M14	38	35,5	43	35	Ø 38 x 1,5	5
K0431.163815	M16	38	35,5	43	35	Ø 38 x 1,5	5
K0431.104215	M10	42	39,9	43	35	Ø 42,4 x 1,5	6
K0431.124215	M12	42	39,9	43	35	Ø 42,4 x 1,5	6
K0431.144215	M14	42	39,9	43	35	Ø 42,4 x 1,5	6
K0431.164215	M16	42	39,9	43	35	Ø 42,4 x 1,5	6
K0431.204215	M20	42	39,9	43	35	Ø 42,4 x 1,5	6
K0431.124815	M12	48	45,8	55	44	Ø 48,3 x 1,5	6
K0431.144815	M14	48	45,8	55	44	Ø 48,3 x 1,5	6
K0431.164815	M16	48	45,8	55	44	Ø 48,3 x 1,5	6
K0431.204815	M20	48	45,8	55	44	Ø 48,3 x 1,5	6
K0431.125015	M12	50	48,4	55	44	Ø 50,9 x 1,5	6
K0431.145015	M14	50	48,4	55	44	Ø 50,9 x 1,5	6
K0431.165015	M16	50	48,4	55	44	Ø 50,9 x 1,5	6
K0431.205015	M20	50	48,4	55	44	Ø 50,9 x 1,5	6

Levelling feet

for aluminium profiles

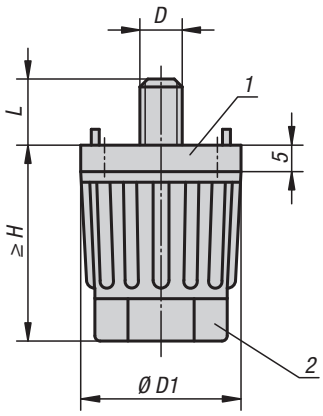

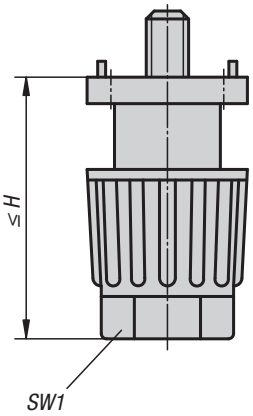

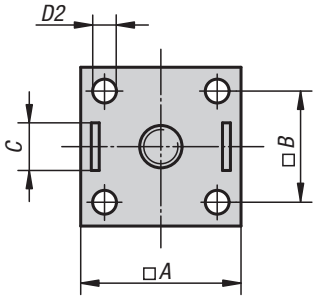

Material:
Body fibreglass reinforced thermoplastic.
Spindle and washer steel.

Version:
Body black.
Spindle and washer galvanized.

Sample order:
K0432.300806

Note:
These levelling feet are suitable for tables and lighter installations. The foot height is adjusted by turning the base nut by hand or spanner. The pins on the top flange centre the foot and prevent it turning. These levelling feet can be attached to aluminium profiles using T-slot nuts, no need for drilling.

Drawing reference:
1) support flange
2) nut

Side mounted in profile keyway
no drilling required when using a T-slot nut

Profile end mounted

KIPP Levelling feet for aluminium profiles

Order No.	A for aluminium profile	B	C for slot	D	D1	D2 for countersunk screw	H min. - max.	L	SW1	Load rating max. kN
K0432.300806	30	20,5	8	M6	30	M4	35-50	9	22	1,5
K0432.300808	30	20,5	8	M8	30	M4	35-50	9	22	1,5
K0432.301006	30	20,5	10	M6	30	M4	35-50	9	22	1,5
K0432.400808	40	28	8	M8	40	M6	45-65	9	30	1,5
K0432.401006	40	28	10	M6	40	M6	45-65	9	30	1,5
K0432.401008	40	28	10	M8	40	M6	45-65	9	30	1,5

Levelling feet

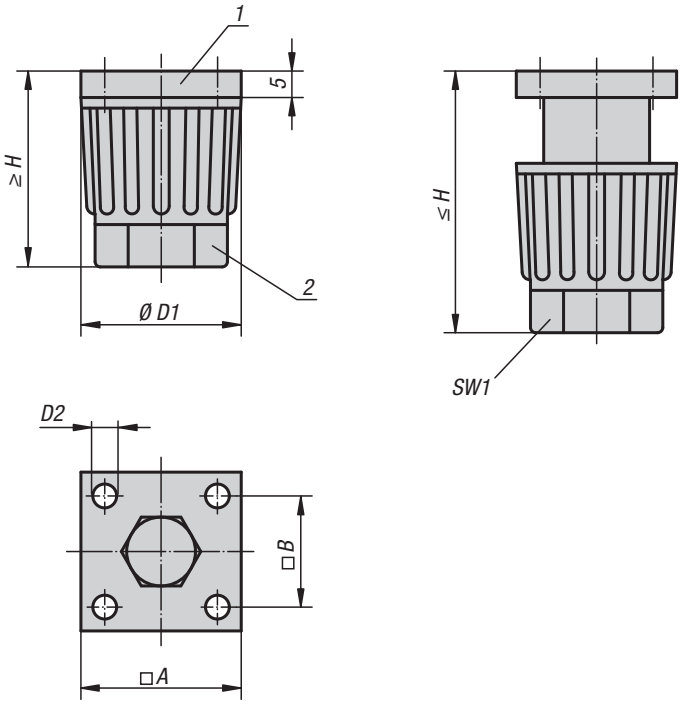

Material:
Body fibreglass reinforced thermoplastic.
Hexagon head screw steel.

Version:
Body black.
Hexagon head screw galvanized.

Sample order:
K0433.3004

Note:
The flat top flange and sunken screw head make these levelling feet ideal for mounting on smooth surfaces. The foot height is adjusted by turning the base nut by hand or spanner.

Drawing reference:
1) support flange
2) nut

KIPP Levelling feet

Order No.	A	B	D1	D2 for countersunk screw	H min. - max.	SW1	Load rating max. kN
K0433.3004	30	20,5	30	M4	35-50	22	1,5
K0433.4006	40	28	40	M6	45-65	30	1,5

Swivel thrust pads

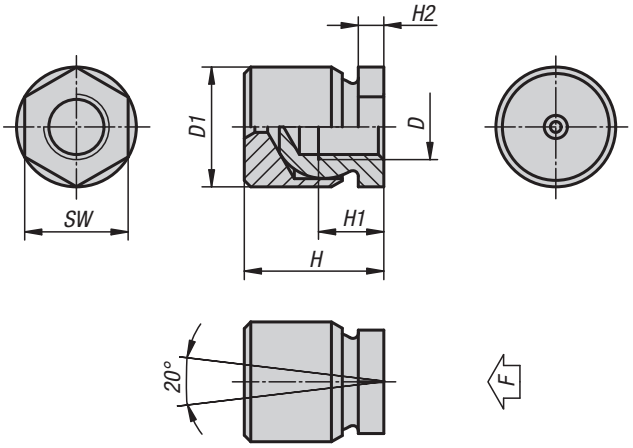

Material:
Ball element case-hardened steel.
Thrust pad mild steel ETG 100.

Version:
Black oxidised.

Sample order:
K0304.10

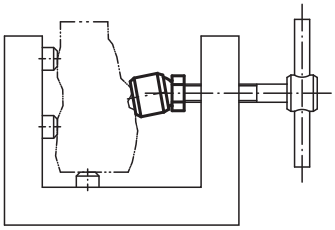

KIPP Swivel feet

Order No.	D	D1	H	H1	H2	SW	F max. N
K0304.05	M5	13	16,5	6,5	4	10	1620
K0304.06	M6	13	16,5	8,5	4	10	2330
K0304.08	M8	16	21	9	4	13	4150
K0304.10	M10	19	23	10	4	17	6480
K0304.12	M12	22	25,5	12	4,7	19	8320
K0304.16	M16	25	29,5	14	5	24	13940
K0304.20	M20	32	36	18	8,5	30	21000

Swivel feet

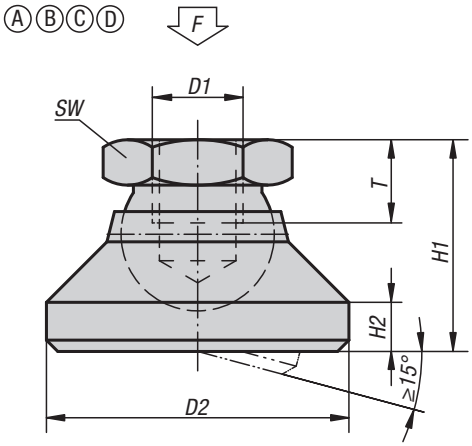

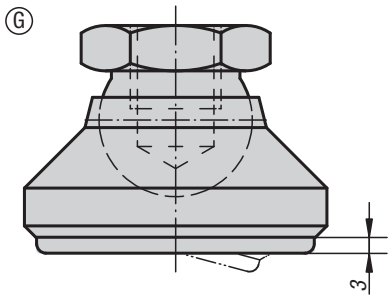

Material:
Form A: Thrust plate carbon steel, ball element free-cutting steel.
Form G: Ball element steel.
Form B: Stainless steel
Form C: Thrust plate POM, ball element free-cutting steel.
Form D: Thrust plate POM, ball element stainless steel

Anti-slip plate thermoplastic elastomer.

Version:
Form A, G: Ball element case-hardened, black oxidised.
Form G: Ball element case hardened, black oxidised with anti-slip plate
Form B: Bright.
Form C: Ball element case-hardened, black oxidised.
Form D: Ball element bright.

Sample order:
K0395.112

Note:
The anti-slip plate absorbs vibrations and prevents the swivel foot slipping.

KIPP Swivel feet

Order No. Form A	Order No. Form B	D1	D2	H1	H2	T	SW	Load rating max. kN (static load only)
K0395.106	**K0395.306**	M6	20	15	2,5	8,5	10	10
K0395.108	**K0395.308**	M8	25	18	4	9	13	18
K0395.110	**K0395.310**	M10	32	22	5	10	17	20
K0395.112	**K0395.312**	M12	40	26	6	12	19	35
K0395.116	**K0395.316**	M16	50	32	7	14	24	45
K0395.120	**K0395.320**	M20	60	42	8	18	30	55

Order No. Form C	Order No. Form D	D1	D2	H1	H2	T	SW	Load rating max. kN (static load only)
K0395.506	**K0395.206**	M6	20	15	2,5	8,5	10	4
K0395.508	**K0395.208**	M8	25	18	4	9	13	7
K0395.510	**K0395.210**	M10	32	22	5	10	17	10
K0395.512	**K0395.212**	M12	40	26	6	12	19	18
K0395.516	**K0395.216**	M16	50	32	7	14	24	20
K0395.520	**K0395.220**	M20	60	42	8	18	30	22

Order No. Form G	D1	D2	H1	H2	T	SW	Load rating max. kN (static load only)
K0395.410	M10	32	22	5	10	17	12
K0395.412	M12	40	26	6	12	19	17
K0395.416	M16	50	32	7	14	24	20
K0395.420	M20	60	42	8	18	30	24

Swivel feet

with vibration absorption

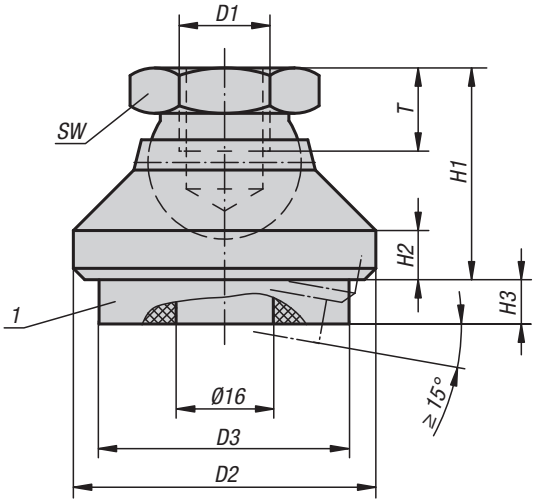

Material:
Steel version:
Thrust plate carbon steel.
Ball element free-cutting steel.
Stainless steel version:
Thrust plate and ball element stainless steel.

Damper plate PUR elastomere (Sylomer V12).

Version:
Steel version:
Thrust plate black oxidised.
Ball element case-hardened, black oxidised.

Stainless steel version:
bright.

Damper plate grey, glued in, anti-slip.
Temp. range -30 °C to +70 °C.

Sample order:
K0420.110

Note:
The load rating given in the table is a recommendation of the permanent static load to which the damping element should be used.
This static load corresponds to a surface pressure of 0.4 N/mm² at which the material achieves its optimum absorption properties. It is taken into account that under dynamic loading an additional load of up to 0.6 N/mm² may occur.
The damper plate absorbs vibrations and prevents the swivel foot slipping.

For swivel feet without vibration absorption see article No. K0395.

Drawing reference:
1) damper plate

KIPP Swivel feet with vibration absorption

Order No.	Main material	D1	D2	D3	H1	H2	H3 by 0 / 0.4 / 0.6 N/mm²	T	SW	Load rating N (by 0.4 N/mm²)
K0420.110	Steel	M10	32	30,5	22	5	8 / 6,8 / 5,9	10	17	212
K0420.112	Steel	M12	40	30,5	26	6	8 / 6,8 / 5,9	12	19	212
K0420.116	Steel	M16	50	40,5	32	7	8 / 6,8 / 5,9	14	24	435
K0420.120	Steel	M20	60	50	42	8	8 / 6,8 / 5,9	18	30	705
K0420.310	Stainless steel	M10	32	30,5	22	5	8 / 6,8 / 5,9	10	17	212
K0420.312	Stainless steel	M12	40	30,5	26	6	8 / 6,8 / 5,9	12	19	212
K0420.316	Stainless steel	M16	50	40,5	32	7	8 / 6,8 / 5,9	14	24	435
K0420.320	Stainless steel	M20	60	50	42	8	8 / 6,8 / 5,9	18	30	705

Grub screws

with ball thrust point

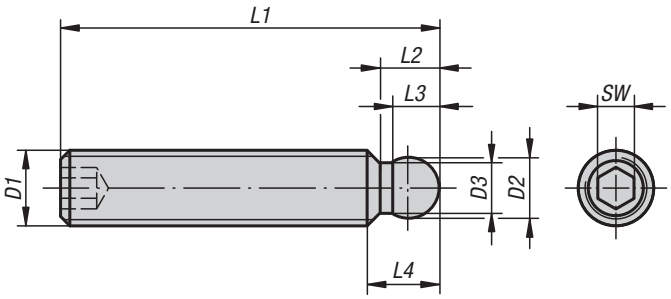

Material:
Grade 5.8.

Version:
Black oxidised.

Sample order:
K0391.06X50 (include length L1.)

Note:
The grub screws are used in conjunction with a thrust pad K0393.

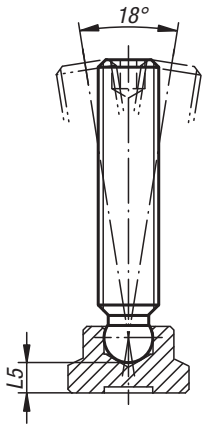

KIPP Grub screws with ball thrust point

Order No.	D1	L1	D2	D3	L2	L3	L4	L5	SW
K0391.06X	M6	30/35/40/50	4,5	3,5	4,3	3,7	5,5	3,8	3
K0391.08X	M8	35/40/45/50/60	6	4,8	5,8	4,8	7,4	4,4	4
K0391.10X	M10	50/55/60/65/80	8	6,5	7,2	6,3	9	5	5
K0391.12X	M12	60/65/70/80	8	6,5	7,2	6,3	9,8	6,9	6

Thrust pads

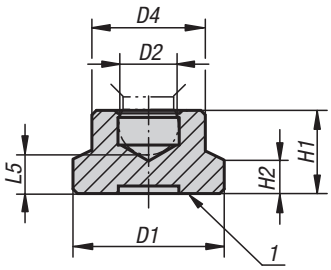

Material:
Steel.
PA 6 plastic.

Version:
Black oxidised.
Black plastic.

Sample order:
K0393.08

Note:
Suitable for grub screws with ballend pin.

Drawing reference:
1) thrust face

KIPP Thrust pads

Order No.	Form	Main material	D1	D2	D4	H1	H2	L5	Suitable for grub screws
K0393.06	A	Steel	15	4,4	8,6	7,6	2,5	3,8	M6
K0393.08	A	Steel	18	5,9	12	9	3,5	4,4	M8
K0393.10	A	Steel	21	7,9	15	11	4	5	M10
K0393.12	A	Steel	25	7,9	18	13	5	6,9	M12
K0393.206	A	Polyamide	15	4,4	8,6	7,6	2,5	3,8	M6
K0393.208	B	Polyamide	18	5,9	12	9	3,5	4,4	M8
K0393.210	C	Polyamide	21	7,9	15	11	4	5	M10
K0393.212	C	Polyamide	25	7,9	18	13	5	6,9	M12

Grub screws

with thrust point DIN 6332

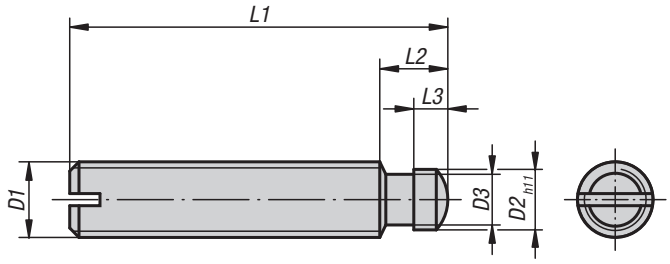

Material:
Steel or stainless steel

Version:
Steel: thrust point case-hardened, black.
Stainless steel: bright.

Sample order:
K0390.12X60 (include length L1.)

Note:
The thrust journal of the grub screws per DIN 6332 is designed for direct clamping as well as for use in conjunction with a thrust pad K0392.

Drawing reference:
1) snap ring

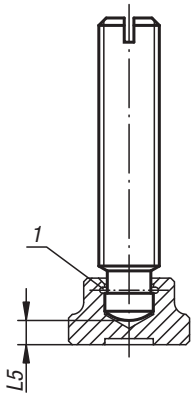

KIPP Grub screws with thrust point DIN 6332

Order No. Steel	Order No. Stainless steel	D1	L1	D2	D3	L2	L3	L5
K0390.06X	**K0390.061X**	M6	30/35/40/50	4,5	4	6	2,5	2,2
K0390.08X	**K0390.081X**	M8	35/40/45/50/60	6	5,4	7,5	3	3
K0390.10X	**K0390.101X**	M10	50/55/60/65/80	8	7,2	9	4,5	3,6
K0390.12X	**K0390.121X**	M12	60/65/70/80/100	8	7,2	10	4,5	4,5
K0390.14X	**K0390.141X**	M14	60/80/100	10	9	12	5	5
K0390.16X	**K0390.161X**	M16	65/70/80/100/125	12	11	12	5	5,3
K0390.20X	**K0390.201X**	M20	80/90/100/125/150	15,5	14,4	14	5,5	5,6

Thrust pads

DIN 6311 enhanced

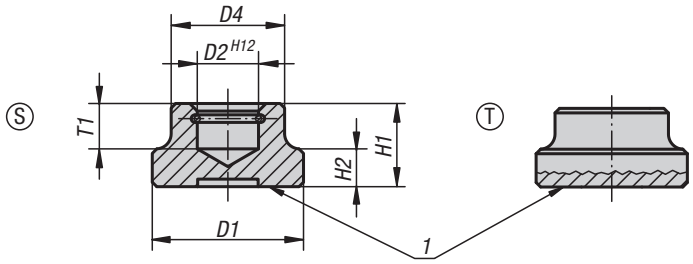

Material:
Steel: case-hardened. Snap ring spring steel.
Stainless steel: bright. Snap ring stainless steel.

Version:
Steel black oxidised.
Stainless steel bright.

Sample order:
K0392.12

Note:
When fitting the thrust pad, ensure that it is inclined as far as possible in the direction of the snap ring opening. The snap ring is supplied assembled.

Drawing reference:
Form S: thrust pad with snap ring
Form T: low design, large clamping surface with snap ring

1) thrust face

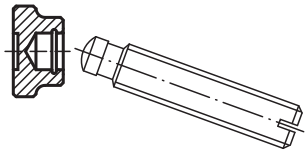

KIPP Thrust pads DIN 6311 enhanced

Order No. Steel	Order No. Stainless steel	Form	D1	D2	D4	H1	H2	T1	For grub screws with trust point DIN 6332
K0392.06	**K0392.061**	S	12	4,6	10	7	2,5	4	M6
K0392.08	**K0392.081**	S	16	6,1	12	9	4	5	M8
K0392.10	**K0392.101**	S	20	8,1	15	11	5	6	M10
K0392.12	**K0392.121**	S	25	8,1	18	13	7	7	M12
K0392.16	**K0392.161**	S	32	12,1	22	15	7	7,5	M16
K0392.20	**K0392.201**	S	40	15,6	28	16	9	8	M20
K0392.108	**-**	T	25	6,1	12	8	4	4,5	M8
K0392.110	**-**	T	32	8,1	18	10	6	6	M10 / M12
K0392.116	**-**	T	40	12,1	22	12	7	7	M16

Thrust spindles

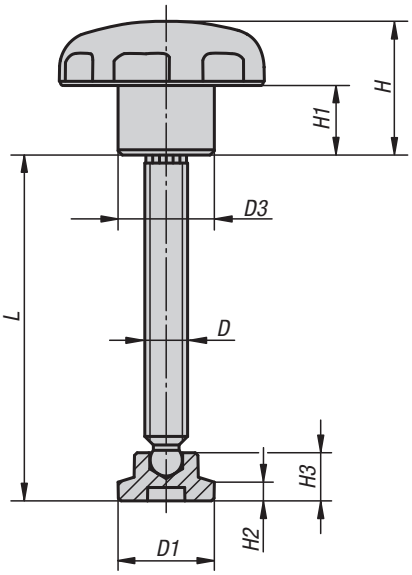

Material:
Star grip: thermoplastic.
Bush: steel.
Grub screw: steel, grade 5.8.
Thrust pad: plastic PA 6.

Version:
Star grip, thrust pad black.
Bush galvanized and blue passivated
Grub screw black oxidised.

Sample order:
K0394.06053

Note:
The thrust pad is supplied loose. It can be lightly pressed onto the end of the spindle.

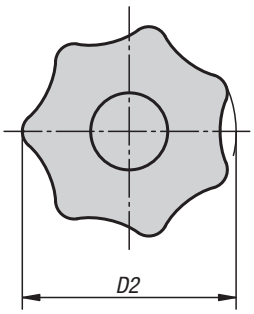

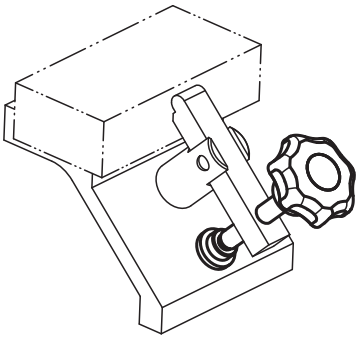

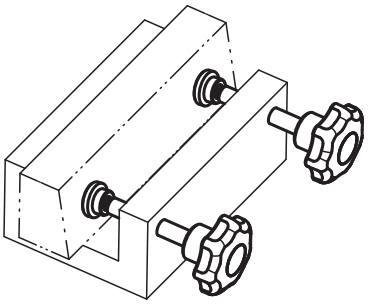

KIPP Thrust spindles

Order No.	D	D1	D2	D3	L	H	H1	H2	H3
K0394.06053	M6	15	32	14	53,8	20	10	2,5	7,6
K0394.08064	M8	18	40	18	64,6	25	13	3,5	9
K0394.10070	M10	21	50	22	70,1	32	17	4	11
K0394.12086	M12	25	63	26	86	40	21	5	13

Notes